KA1M0265R/KA1H0265R

Fairchild Power Switch(FPS)

Features

- Precision Fixed Operating Frequency
- KA1M0265R (70kHz) , KA1H0265R (100kHz)
- Pulse by Pulse Over Current Limiting
- Over Load Protection
- Over Voltage Protection (Min. 23V)
- Internal Thermal Shutdown Function
- Under Voltage Lockout
- Internal High Voltage Sense FET
- Auto Restart

Description

The Fairchild Power Switch(FPS) product family is specially designed for an off line SMPS with minimal external components. The Fairchild Power Switch(FPS) consist of high voltage power SenseFET and current mode PWM controller IC. PWM controller features integrated fixed oscillator, under voltage lock out, leading edge blanking, optimized gate turn-on/turn-off driver, thermal shut down protection, over voltage protection, temperature compensated precision current sources for loop compensation and fault protection circuit. compared to discrete MOSFET and controller or R_{CC} switching converter solution, a Fairchild Power Switch(FPS) can reduce total component count, design size, weight and at the same time increase & efficiency, productivity, and system reliability. It has a basic platform well suited for cost effective design in either a flyback converter or a forward converter.

TO-220F-4L



1. GND 2. DRAIN 3. V_{CC} 4. FB

Internal Block Diagram

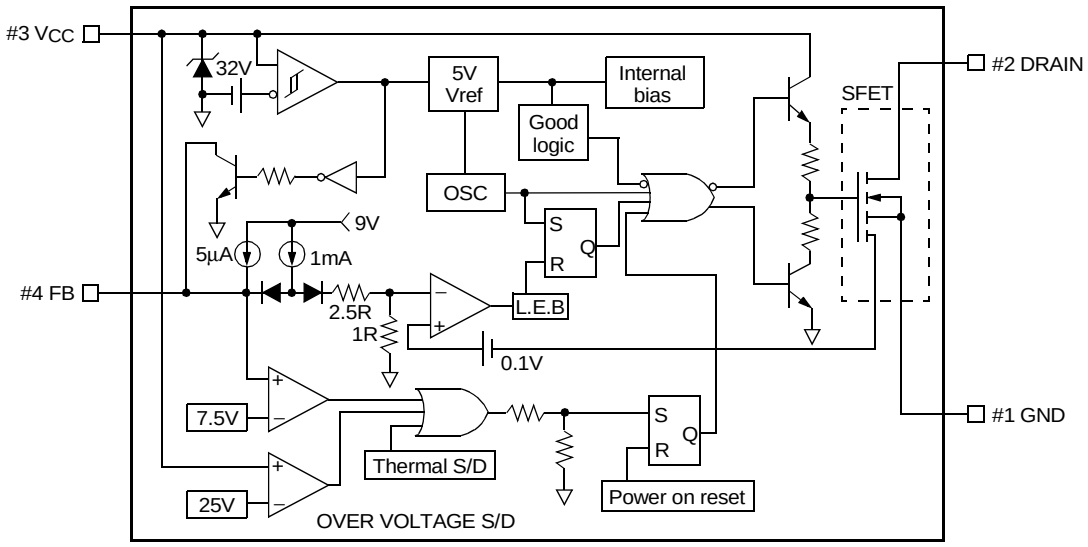

©2003 Fairchild Semiconductor Corporation

Absolute Maximum Ratings

Parameter	Symbol	Value	Unit
Maximum Drain Voltage (1)	$V_{D,MAX}$	650	V
Drain-Gate Voltage (R_{GS}=1MΩ)	V_{DGR}	650	V
Gate-Source (GND) Voltage	V_{GS}	±30	V
Drain Current Pulsed (2)	I_{DM}	8.0	A_{DC}
Single Pulsed Avalanche Energy (3)	E_{AS}	68	mJ
Continuous Drain Current (T_C=25°C)	I_D	2.0	A_{DC}
Continuous Drain Current (T_C=100°C)	I_D	1.3	A_{DC}
Maximum Supply Voltage	$V_{CC,MAX}$	30	V
Input Voltage Range	V_{FB}	-0.3 to V_{SD}	V
Total Power Dissipation	P_D	42	W
	Darting	0.33	W/°C
Operating Ambient Temperature	T_A	-25 to +85	°C
Storage Temperature	T_{STG}	-55 to +150	°C

Notes:

1. T_j = 25°C to 150°C
2. Repetitive rating: Pulse width limited by maximum junction temperature
3. L = 51mH, V_{DD} = 50V, R_G = 25Ω, starting T_j = 25°C

Electrical Characteristics (SFET part)

(Ta=25°C unless otherwise specified)

Parameter	Symbol	Condition	Min.	Typ.	Max.	Unit
Drain-Source Breakdown Voltage	BV_{DSS}	V_{GS}=0V, I_D=50μA	650	-	-	V
Zero Gate Voltage Drain Current	I_{DSS}	V_{DS}=Max., Rating, V_{GS}=0V	-	-	50	μA
		V_{DS}=0.8Max., Rating, V_{GS}=0V, T_C=125°C	-	-	200	μA
Static Drain-Source on Resistance (Note)	$R_{DS(ON)}$	V_{GS}=10V, I_D=1.0A	-	5.0	6.0	Ω
Forward Transconductance (Note)	gfs	V_{DS}=50V, I_D=1.0A	1.5	2.5	-	S
Input Capacitance	Ciss	V_{GS}=0V, V_{DS}=25V, f=1MHz	-	550	-	pF
Output Capacitance	Coss		-	38	-	
Reverse Transfer Capacitance	Crss		-	17	-	
Turn on Delay Time	$t_{d(on)}$	V_{DD}=0.5BV_{DSS}, I_D=2.0A (MOSFET switching time are essentially independent of operating temperature)	-	20	-	nS
Rise Time	tr		-	15	-	
Turn Off Delay Time	$t_{d(off)}$		-	55	-	
Fall Time	tf		-	25	-	
Total Gate Charge (Gate-Source+Gate-Drain)	Qg	V_{GS}=10V, I_D=2.0A, V_{DS}=0.5BV_{DSS} (MOSFET switching time are essentially independent of operating temperature)	-	-	35	nC
Gate-Source Charge	Qgs		-	3	-	
Gate Drain (Miller) Charge	Qgd		-	12	-	

Note:

1. Pulse test: Pulse width ≤ 300μS, duty cycle ≤ 2%
2. $S = \frac{1}{R}$

Electrical Characteristics (Control Part) (Continued)

(Ta=25°C unless otherwise specified)

Parameter	Symbol	Condition	Min.	Typ.	Max.	Unit
UVLO SECTION						
Start Threshold Voltage	V_{START}	-	14	15	16	V
Stop Threshold Voltage	V_{STOP}	After turn on	9	10	11	V
OSCILLATOR SECTION						
Initial Accuracy	F_{OSC}	**KA1M0265R**	61	67	73	kHz
		KA1H0265R	90	100	110	
Frequency Change With Temperature (2)	$\Delta F/\Delta T$	-25°C ≤ Ta ≤ +85°C	-	±5	±10	%
Maximum Duty Cycle	Dmax	**KA1M0265R**	74	77	80	%
		KA1H0265R	64	67	70	
FEEDBACK SECTION						
Feedback Source Current	I_{FB}	Ta=25°C, 0V ≤ Vfb ≤ 3V	0.7	0.9	1.1	mA
Shutdown Feedback Voltage	V_{SD}	-	6.9	7.5	8.1	V
Shutdown Delay Current	Idelay	Ta=25°C, 5V ≤ Vfb ≤ V_{SD}	4.0	5.0	6.0	µA
REFERENCE SECTION						
Output Voltage (1)	Vref	Ta=25°C	4.80	5.00	5.20	V
Temperature Stability (1)(2)	Vref/ΔT	-25°C ≤ Ta ≤ +85°C	-	0.3	0.6	mV/°C
CURRENT LIMIT (SELF-PROTECTION) SECTION						
Peak Current Limit	I_{OVER}	Max. inductor current	1.05	1.2	1.35	A
PROTECTION SECTION						
Thermal Shutdown Temperature (Tj) (1)	T_{SD}	-	140	160	-	°C
Over Voltage Protection Voltage	V_{OVP}	-	23	25	28	V
TOTAL DEVICE SECTION						
Start-Up Current	I_{START}	V_{CC}=14V	0.1	0.3	0.4	mA
Operating Supply Current (Control Part Only)	I_{OP}	Ta=25°C	6	12	18	mA
V_{CC} Zener Voltage	V_Z	I_{CC}=20mA	30	32.5	35	V

Note:

1. These parameters, although guaranteed, are not 100% tested in production
2. These parameters, although guaranteed, are tested in EDS (wafer test) process

Typical Performance Characteristics

(These characteristic graphs are normalized at Ta=25°C)

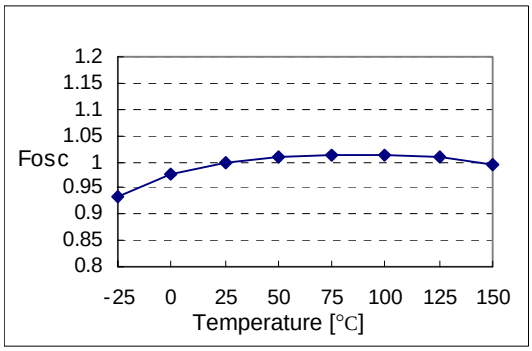

Figure 1. Operating Frequency

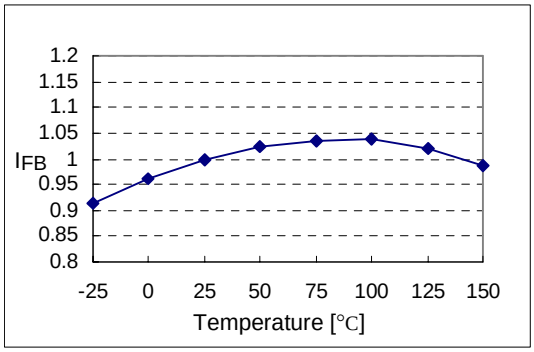

Figure 2. Feedback Source Current

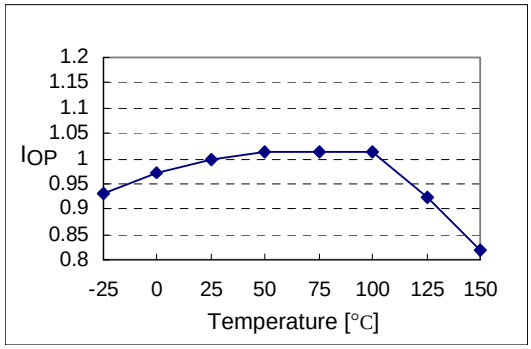

Figure 3. Operating Supply Current

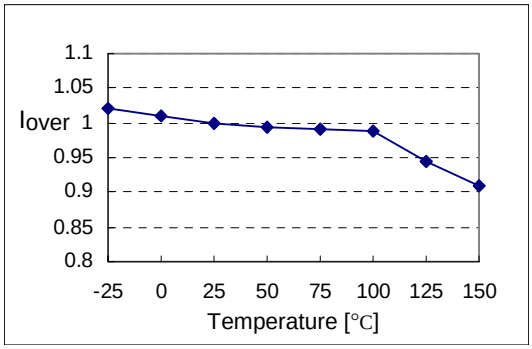

Figure 4. Peak Current Limit

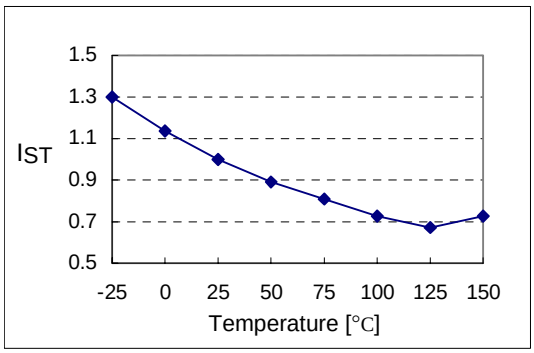

Figure 5. Start up Current

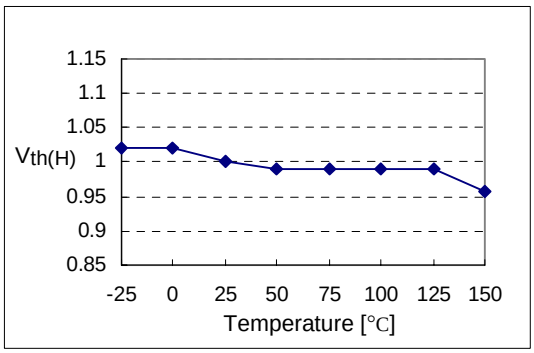

Figure 6. Start Threshold Voltage

Typical Performance Characteristics (Continued)

(These characteristic graphs are normalized at Ta=25°C)

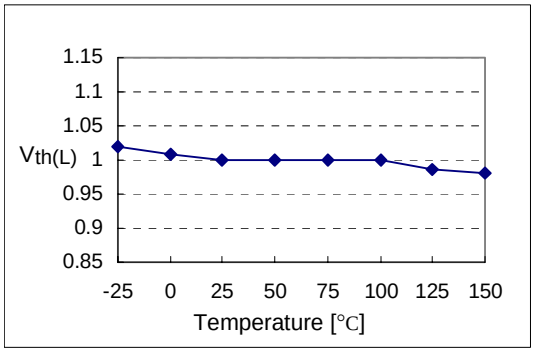

Figure 7. Stop Threshold Voltage

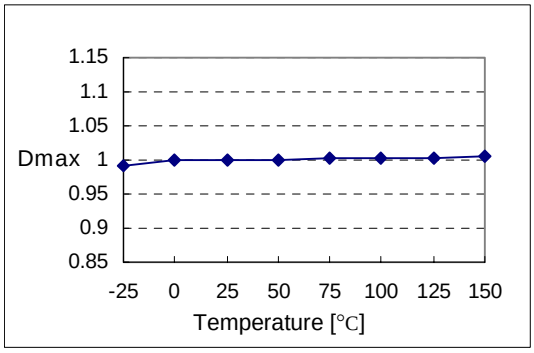

Figure 8. Maximum Duty Cycle

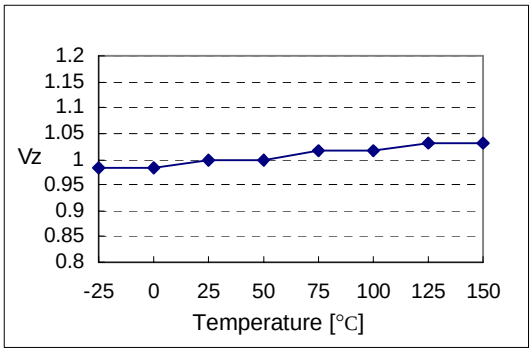

Figure 9. V_{CC} Zener Voltage

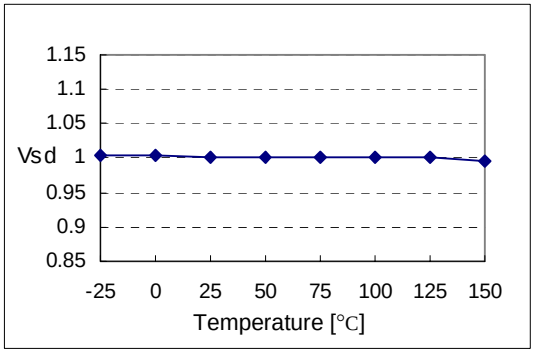

Figure 10. Shutdown Feedback Voltage

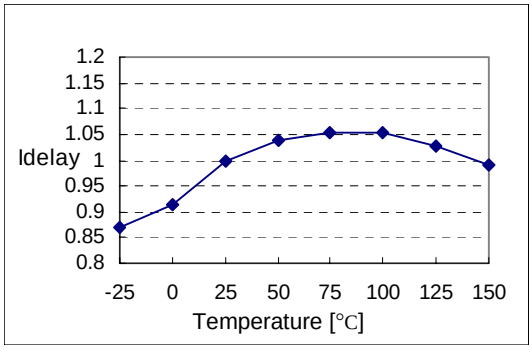

Figure 11. Shutdown Delay Current

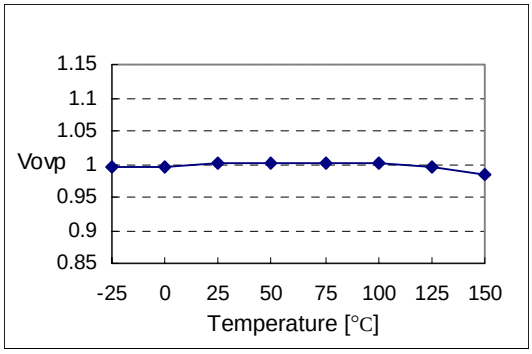

Figure 12. Over Voltage Protection

Typical Performance Characteristics (Continued)

(These characteristic groups are normalized at Ta=25°C)

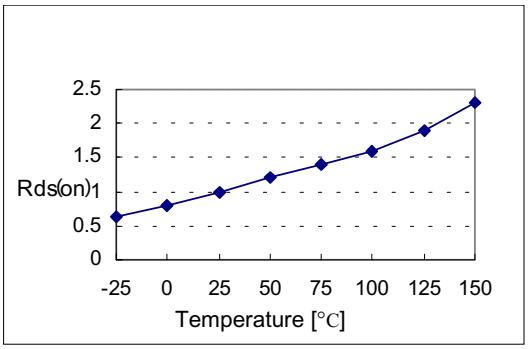

Figure 13. Static Drain-Source on Resistance

Package Dimensions

TO-220F-4L

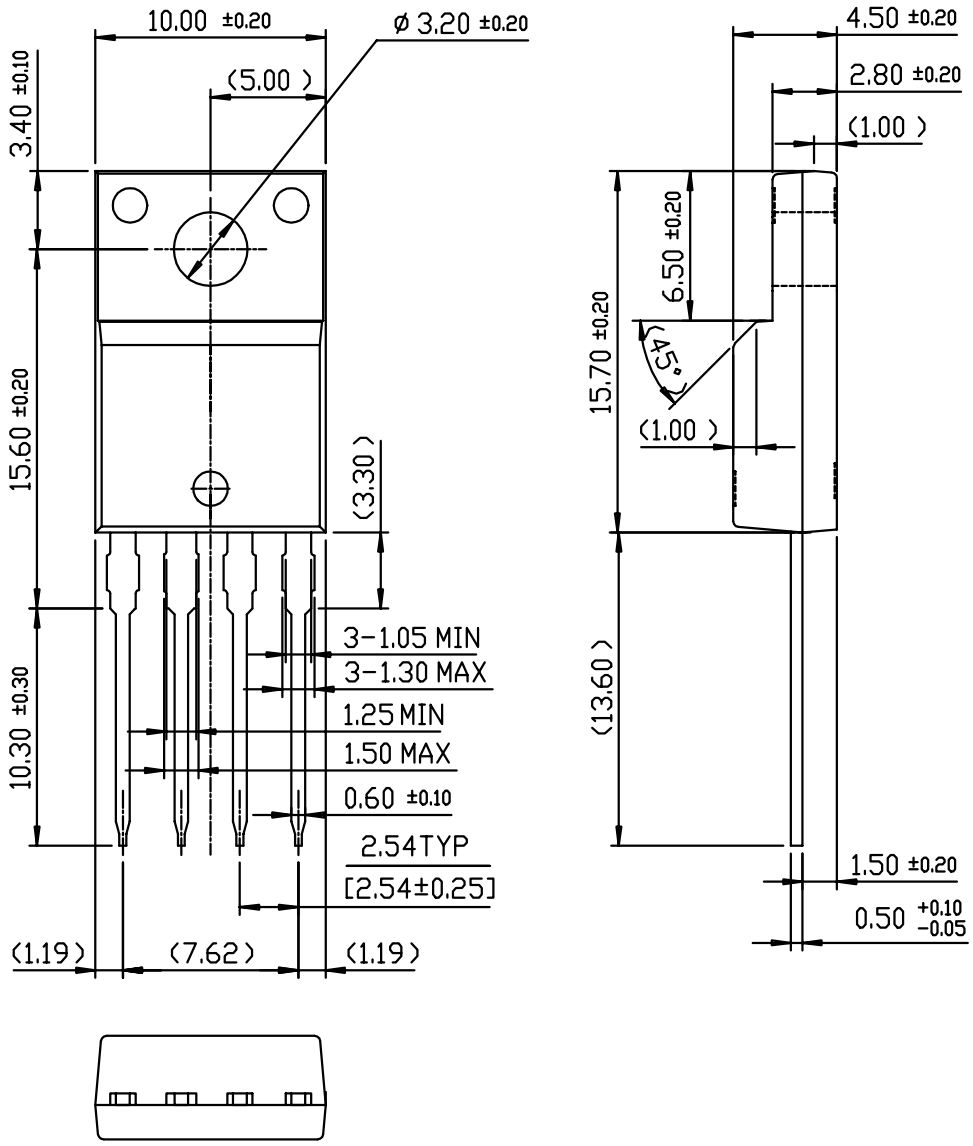

Package Dimensions (Continued)

TO-220F-4L(Forming)

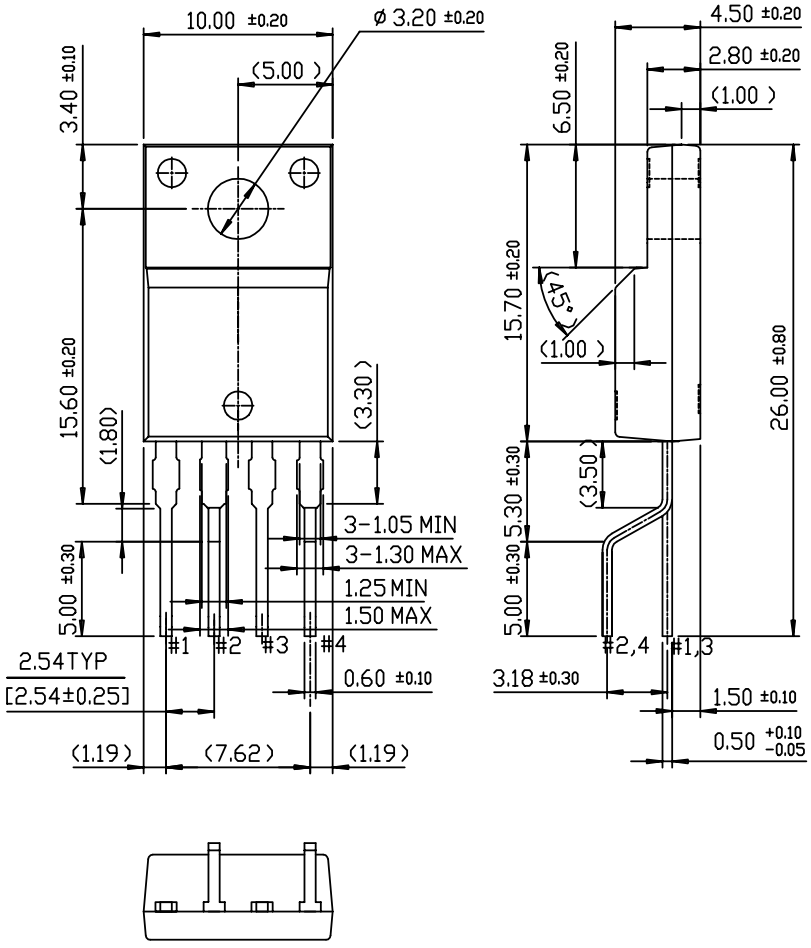

Ordering Information

Product Number	Package	Rating	Fosc
KA1M0265R-TU	TO-220F-4L	650V, 2A	67kHz
KA1M0265R-YDTU	TO-220F-4L(Forming)		
KA1H0265R-TU	TO-220F-4L	650V, 2A	100kHz
KA1H0265R-YDTU	TO-220F-4L(Forming)		

TU : Non Forming Type
YDTU : Forming Type

DISCLAIMER

FAIRCHILD SEMICONDUCTOR RESERVES THE RIGHT TO MAKE CHANGES WITHOUT FURTHER NOTICE TO ANY PRODUCTS HEREIN TO IMPROVE RELIABILITY, FUNCTION OR DESIGN. FAIRCHILD DOES NOT ASSUME ANY LIABILITY ARISING OUT OF THE APPLICATION OR USE OF ANY PRODUCT OR CIRCUIT DESCRIBED HEREIN; NEITHER DOES IT CONVEY ANY LICENSE UNDER ITS PATENT RIGHTS, NOR THE RIGHTS OF OTHERS.

LIFE SUPPORT POLICY

FAIRCHILD'S PRODUCTS ARE NOT AUTHORIZED FOR USE AS CRITICAL COMPONENTS IN LIFE SUPPORT DEVICES OR SYSTEMS WITHOUT THE EXPRESS WRITTEN APPROVAL OF THE PRESIDENT OF FAIRCHILD SEMICONDUCTOR CORPORATION. As used herein:

1. Life support devices or systems are devices or systems which, (a) are intended for surgical implant into the body, or (b) support or sustain life, and (c) whose failure to perform when properly used in accordance with instructions for use provided in the labeling, can be reasonably expected to result in a significant injury of the user.
2. A critical component in any component of a life support device or system whose failure to perform can be reasonably expected to cause the failure of the life support device or system, or to affect its safety or effectiveness.

© 2003 Fairchild Semiconductor Corporation