isc Silicon PNP Power Transistor 2SA1442

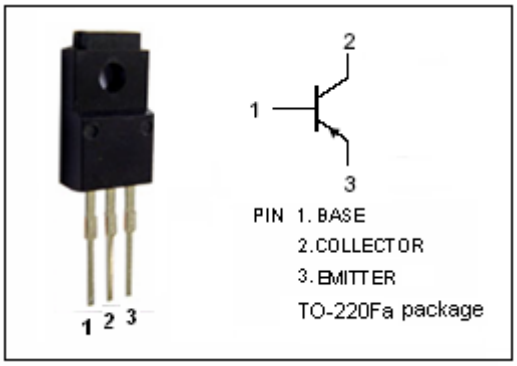

DESCRIPTION

- Collector-Emitter Sustaining Voltage-
  : $V_{CEO(SUS)}$= -60V(Min)
- High DC Current Gain-
  : h_{FE}= 100(Min)@ (V_{CE}= -2V , I_C= -1.5A)
- Low Saturation Voltage-
  : $V_{CE(sat)}$= −0.3V(Max)@ (I_C= -4A, I_B= -0.2A)

APPLICATIONS

- This type of power transistor is developed for high-speed switching and features a high h_{FE} at low $V_{CE(sat)}$,which is ideal for use as a driver in DC/DC converters and actuators.

ABSOLUTE MAXIMUM RATINGS(T_a=25℃)

SYMBOL	PARAMETER	VALUE	UNIT
V_{CBO}	Collector-Base Voltage	-100	V
V_{CEO}	Collector-Emitter Voltage	-60	V
V_{EBO}	Emitter-Base Voltage	-7.0	V
I_C	Collector Current-Continuous	-7.0	A
I_{CM}	Collector Current-Pulse	-14	A
I_B	Base Current-Continuous	-3.5	A
P_T	Total Power Dissipation @T_C=25℃	30	W
	Total Power Dissipation @T_a=25℃	2.0	
T_J	Junction Temperature	150	℃
T_{stg}	Storage Temperature	-55~150	℃

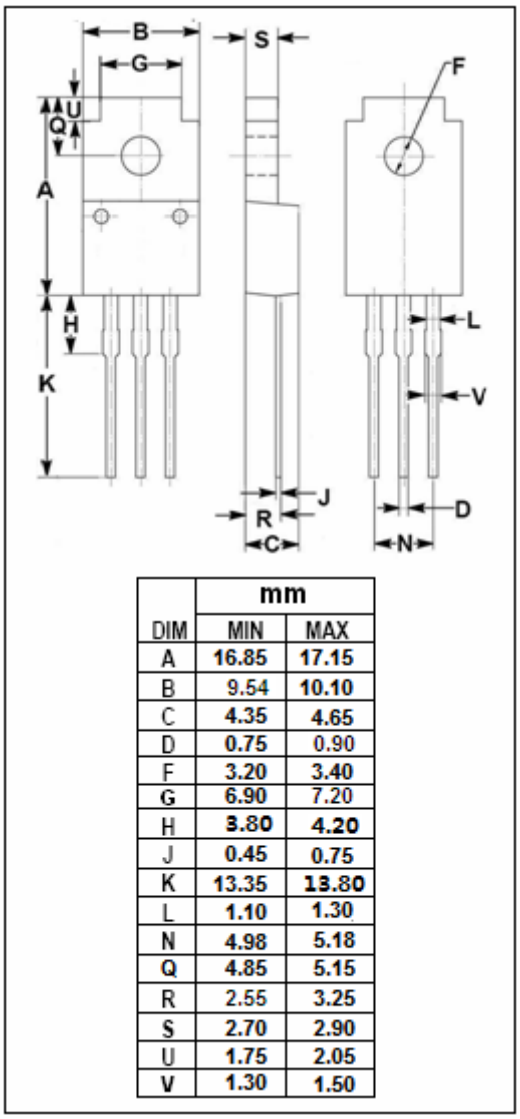

DIM	mm MIN	mm MAX
A	16.85	17.15
B	9.54	10.10
C	4.35	4.65
D	0.75	0.90
F	3.20	3.40
G	6.90	7.20
H	3.80	4.20
J	0.45	0.75
K	13.35	13.80
L	1.10	1.30
N	4.98	5.18
Q	4.85	5.15
R	2.55	3.25
S	2.70	2.90
U	1.75	2.05
V	1.30	1.50

isc Silicon PNP Power Transistor 2SA1442

ELECTRICAL CHARACTERISTICS

Tj=25℃ unless otherwise specified

SYMBOL	PARAMETER	CONDITIONS	MIN	TYP.	MAX	UNIT
$V_{CEO(SUS)}$	Collector-Emitter Sustaining Voltage	I_C= -4.0A ; I_B= -0.4A, L= 1mH	-60			V
$V_{CEX(SUS)}$	Collector-Emitter Sustaining Voltage	I_C= -4.0A ; I_{B1}=-I_{B2}= -0.4A, $V_{BE(OFF)}$=1.5V, L=180μ H,clamped	-60			V
$V_{CE(sat)-1}$	Collector-Emitter Saturation Voltage	I_C= -4A; I_B= -0.2A			-0.3	V
$V_{CE(sat)-2}$	Collector-Emitter Saturation Voltage	I_C= -6A; I_B= -0.3A			-0.5	V
$V_{BE(sat)-1}$	Base-Emitter Saturation Voltage	I_C= -4A; I_B= -0.2A			-1.2	V
$V_{BE(sat)-2}$	Base-Emitter Saturation Voltage	I_C= -6A; I_B= -0.3A			-1.5	V
I_{CBO}	Collector Cutoff Current	V_{CB}= -60V ; I_E=0			-10	μ A
I_{CER}	Collector Cutoff Current	V_{CE}= -60V ; R_{BE}= 50Ω ,T_a=125℃			-1.0	mA
I_{CEX}	Collector Cutoff Current	V_{CE}= -60V; $V_{BE(off)}$= -1.5V V_{CE}= -60V; $V_{BE(off)}$= -1.5V,T_a=125℃			-10 -1.0	μ A mA
I_{EBO}	Emitter Cutoff Current	V_{EB}= -5V; I_C= 0			-10	μ A
h_{FE-1}	DC Current Gain	I_C= -0.7A ; V_{CE}= -2V	100			
h_{FE-2}	DC Current Gain	I_C= -1.5A ; V_{CE}= -2V	100		400	
h_{FE-3}	DC Current Gain	I_C= -4.0A ; V_{CE}= -2V	60			
C_{OB}	Output Capacitance	I_E=0; V_{CB}= -10V;f= 1.0MHz		180		pF
f_T	Current-Gain—Bandwidth Product	I_C=-1A ; V_{CE}= -10V		40		MHz
Switching times						
t_{on}	Turn-on Time	I_C= -4.0A ,R_L= 12.5Ω , I_{B1}= -I_{B2}= -0.2A,V_{CC}≈-50V			0.3	μ s
t_{stg}	Storage Time				1.5	μ s
t_f	Fall Time				0.3	μ s

◆ **h_{FE-2} Classifications**

M	L	K
100-200	150-300	200-400