Ordering number:ENN2150B

PNP/NPN Epitaxial Planar Silicon Transistors

2SA1526/2SC3920

Switching Applications (with Bias Resistance)

An ON Semiconductor Company

Applications

· Switching circuits, inverter circuits, interface circuits, driver circuits.

Features

· On-chip bias resistance : R1=10kΩ, R2=10kΩ.
· Large current capacity : I_C=500mA.

Package Dimensions

unit:mm

2003B

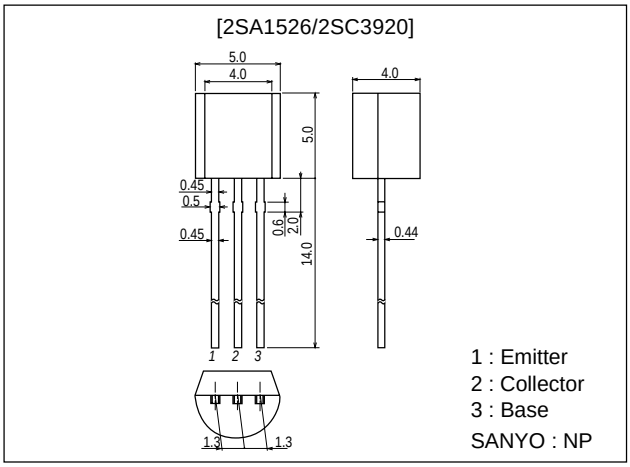

( ) : 2SA1526

Specifications

Absolute Maximum Ratings at Ta = 25˚C

Parameter	Symbol	Conditions	Ratings	Unit
Collector-to-Base Voltage	V_{CBO}		(–)50	V
Collector-to-Emitter Voltage	V_{CEO}		(–)50	V
Emitter-to-Base Voltage	V_{EBO}		(–)10	V
Collector Current	I_C		(–)500	mA
Collector Current (Pulse)	I_{CP}		(–)800	mA
Collector Dissipation	P_C		600	mW
Junction Temperature	Tj		150	˚C
Storage Temperature	Tstg		–55 to +150	˚C

Electrical Characteristics at Ta = 25˚C

Parameter	Symbol	Conditions	Ratings			Unit
			min	typ	max	
Collector Cutoff Current	I_{CBO}	V_{CB}=(–)40V, I_E=0			(–)0.1	μA
	I_{CEO}	V_{CE}=(–)40V, I_B=0			(–)0.5	μA
Emitter Cutoff Current	I_{EBO}	V_{EB}=(–)5V, I_C=0	(–)195	(–)250	(–)360	μA
DC Current Gain	h_{FE}	V_{CE}=(–)5V, I_C=(–)10mA	50			
Gain-Bandwidth Product	f_T	V_{CE}=(–)10V, I_C=(–)5mA		250		MHz
				(200)		MHz

Continued on next page.

■ Any and all SANYO products described or contained herein do not have specifications that can handle applications that require extremely high levels of reliability, such as life-support systems, aircraft's control systems, or other applications whose failure can be reasonably expected to result in serious physical and/or material damage. Consult with your SANYO representative nearest you before using any SANYO products described or contained herein in such applications.

■ SANYO assumes no responsibility for equipment failures that result from using products at values that exceed, even momentarily, rated values (such as maximum ratings, operating condition ranges,or other parameters) listed in products specifications of any and all SANYO products described or contained herein.

Continued from preceding page.

Parameter	Symbol	Conditions	Ratings			Unit
			min	typ	max	
Output Capacitance	C_{ob}	V_{CB}=(–)10V, f=1MHz		3.7		pF
				(5.5)		pF
Collector-to-Emitter Saturation Voltage	$V_{CE(sat)}$	I_C=(–)20mA, I_B=(–)1mA		(–)0.1	(–)0.3	V
Collector-to-Base Breakdown Voltage	$V_{(BR)CBO}$	I_C=(–)10μA, I_E=0	(–)50			V
Collector-to-Emitter Breakdown Voltage	$V_{(BR)CEO}$	I_C=(–)100μA, R_{BE}=∞	(–)50			V
Input OFF-State Voltage	$V_{I(off)}$	V_{CE}=(–)5V, I_C=(–)100μA	(–)0.8	(–)1.1	(–)1.5	V
Input ON-State Voltage	$V_{I(on)}$	V_{CE}=(–)0.2V, I_C=(–)10mA	(–)1.0	(–)2.0	(–)4.0	V
Input Resistance	R1		7	10	13	kΩ
Resistance Ratio	R1/R2		0.9	1.0	1.1	

Electrical Connection

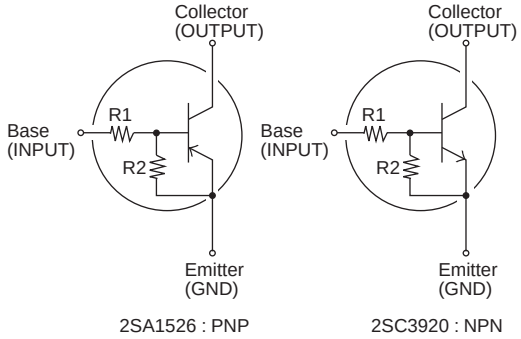

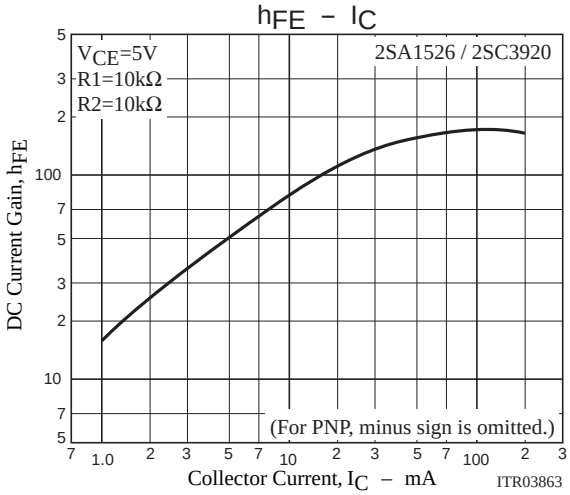

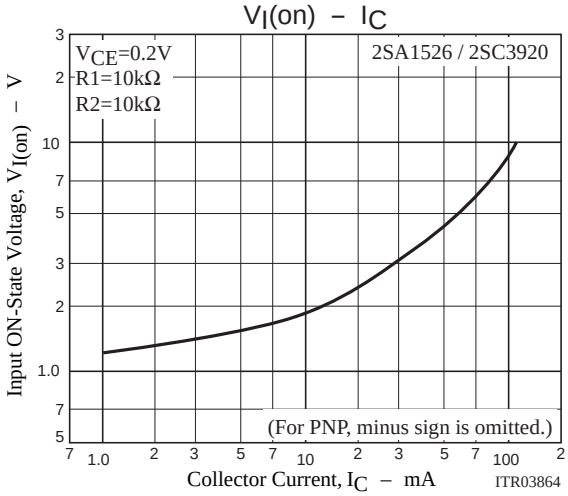

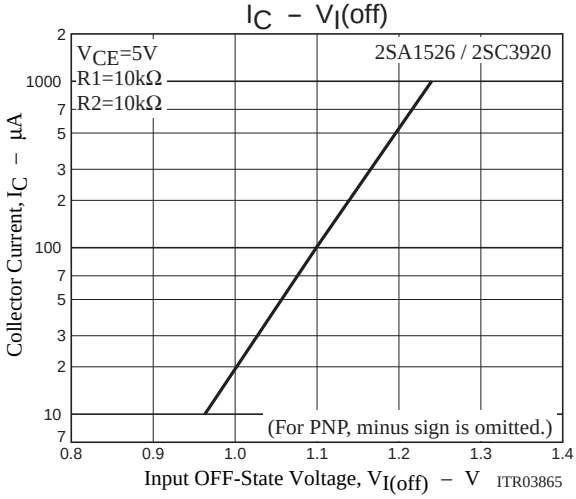

- Specifications of any and all SANYO products described or contained herein stipulate the performance, characteristics, and functions of the described products in the independent state, and are not guarantees of the performance, characteristics, and functions of the described products as mounted in the customer's products or equipment. To verify symptoms and states that cannot be evaluated in an independent device, the customer should always evaluate and test devices mounted in the customer's products or equipment.
- SANYO Electric Co., Ltd. strives to supply high-quality high-reliability products. However, any and all semiconductor products fail with some probability. It is possible that these probabilistic failures could give rise to accidents or events that could endanger human lives, that could give rise to smoke or fire, or that could cause damage to other property. When designing equipment, adopt safety measures so that these kinds of accidents or events cannot occur. Such measures include but are not limited to protective circuits and error prevention circuits for safe design, redundant design, and structural design.
- In the event that any or all SANYO products(including technical data,services) described or contained herein are controlled under any of applicable local export control laws and regulations, such products must not be exported without obtaining the export license from the authorities concerned in accordance with the above law.
- No part of this publication may be reproduced or transmitted in any form or by any means, electronic or mechanical, including photocopying and recording, or any information storage or retrieval system, or otherwise, without the prior written permission of SANYO Electric Co., Ltd.
- Any and all information described or contained herein are subject to change without notice due to product/technology improvement, etc. When designing equipment, refer to the "Delivery Specification" for the SANYO product that you intend to use.
- Information (including circuit diagrams and circuit parameters) herein is for example only ; it is not guaranteed for volume production. SANYO believes information herein is accurate and reliable, but no guarantees are made or implied regarding its use or any infringements of intellectual property rights or other rights of third parties.

This catalog provides information as of May, 2002. Specifications and information herein are subject to change without notice.