BTA24, BTB24, BTA25 BTA26, BTB26, T25

25 A standard and Snubberless™ triacs

Features

- High current triac
- Low thermal resistance with clip bonding
- High commutation (4 quadrant) or very high commutation (3 quadrant) capability
- BTA series UL1557 certified (File ref: 81734)
- Packages are RoHS (2002/95/EC) compliant

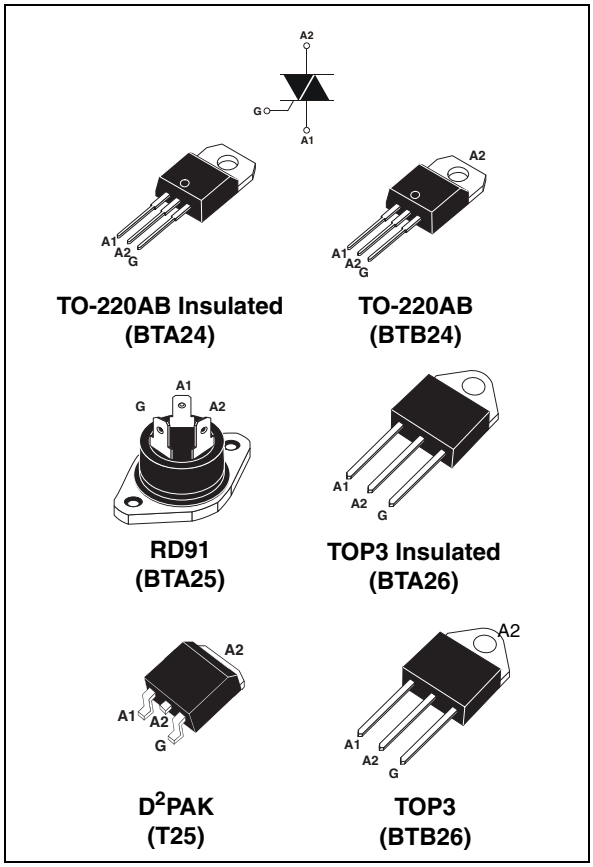

Applications

Applications include the ON/OFF function in applications such as static relays, heating regulation, induction motor starting circuits, etc., or for phase control operation in light dimmers, motor speed controllers, and silmilar.

The snubberless versions (BTA/BTB...W and T25 series) are especially recommended for use on inductive loads, due to their high commutation performances. The BTA series provides an insulated tab (rated at 2500 V_{RMS}).

Description

Available either in through-hole or surface-mount packages, the **BTA24, BTB24, BTA25, BTA26, BTB26** and **T25** triac series is suitable for general purpose mains power AC switching.

Table 1. Device summary

Symbol	Parameter	BTA24(1)	BTB24	BTA25(1)	BTA26(1)	BTB26	T25	Unit
$I_{T(RMS)}$	RMS on-state current	25	25	25	25	25	25	A
V_{DRM}/V_{RRM}	Repetitive peak off-state voltage	600 / 800	600 / 800	600 / 800	600(2) / 800	600	600 / 800	V
I_{GT} (Snubberless)	Triggering gate current	35 / 50	35 / 50	50	35 / 50	-	35	mA
I_{GT} (Standard)	Triggering gate current	-	50	50	50	50	-	mA

1. Insulated packages
2. 600 V version available only with I_{GT} = 50 mA (Snubberless and Standard)

TM: Snubberless is a trademark of STMicroelectronics

1 Characteristics

Table 2. Absolute maximum ratings

Symbol	Parameter			Value	Unit
$I_{T(RMS)}$	RMS on-state current (full sine wave)	TOP3	T_c = 105° C	25	A
		D^2PAK / TO-220AB	T_c = 100° C		
		RD91 Ins/ TOP3 Ins.	T_c = 100° C		
		TO-220AB Ins.	T_c = 75° C		
I_{TSM}	Non repetitive surge peak on-state current (full cycle, T_j initial = 25° C)	F = 50 Hz	t = 20 ms	250	A
		F = 60 Hz	t = 16.7 ms	260	
I^2t	I^2t Value for fusing	t_p = 10 ms		340	A^2s
dI/dt	Critical rate of rise of on-state current I_G = 2 x I_{GT} , $t_r \leq$ 100 ns	F = 120 Hz	T_j = 125° C	50	A/µs
V_{DSM}/V_{RSM}	Non repetitive surge peak off-state voltage	t_p = 10 ms	T_j = 25° C	V_{DRM}/V_{RRM} + 100	V
I_{GM}	Peak gate current	t_p = 20 µs	T_j = 125° C	4	A
$P_{G(AV)}$	Average gate power dissipation		T_j = 125° C	1	W
T_{stg} T_j	Storage junction temperature range Operating junction temperature range			- 40 to + 150 - 40 to + 125	° C

Table 3. Electrical characteristics (T_j = 25° C, unless otherwise specified), Snubberless and logic level (3 quadrants) T25, BTA/BTB24...W, BTA25...W, BTA26...W

Symbol	Test Conditions	Quadrant		T25	BTA/BTB		Unit
				T2535	CW	BW	
I_{GT} (1)	V_D = 12 V R_L = 33 Ω	I - II - III	MAX.	35	35	50	mA
V_{GT}		I - II - III	MAX.	1.3			V
V_{GD}	$V_D = V_{DRM}$ R_L = 3.3 kΩ T_j = 125° C	I - II - III	MIN.	0.2			V
I_H (2)	I_T = 500 mA		MAX.	50	50	75	mA
I_L	I_G = 1.2 I_{GT}	I - III	MAX.	70	70	80	mA
		II		80	80	100	
dV/dt (2)	V_D = 67 %V_{DRM} gate open	T_j = 125° C	MIN.	500	500	1000	V/µs
(dI/dt)c (2)	Without snubber	T_j = 125° C	MIN.	13	13	22	A/ms

1. minimum I_{GT} is guaranted at 5% of I_{GT} max.
2. for both polarities of A2 referenced to A1.

Table 4. Electrical characteristics (T_j = 25° C, unless otherwise specified), standard (4 quadrants), BTB24...B, BTA25...B, BTA26...B, BTB26...B

Symbol	Test Conditions	Quadrant		Value	Unit
I_{GT} (1)	V_D = 12 V R_L = 33 Ω	I - II - III	MAX.	50	mA
		IV		100	
V_{GT}		ALL	MAX.	1.3	V
V_{GD}	$V_D = V_{DRM}$ R_L = 3.3 kΩ T_j = 125° C	ALL	MIN.	0.2	V
I_H(2))	I_T = 500 mA		MAX.	80	mA
I_L	I_G = 1.2 I_{GT}	I - III - IV	MAX.	70	mA
		II		160	
dV/dt(2)	V_D = 67 %V_{DRM} gate open	T_j = 125° C	MIN.	500	V/µs
(dV/dt)c (2)	(dI/dt)c = 13.3 A/ms	T_j = 125° C	MIN.	10	V/µs

1. minimum I_{GT} is guaranted at 5% of I_{GT} max.
2. for both polarities of A2 referenced to A1.

Table 5. Static characteristics

Symbol	Test Conditions			Value	Unit
V_{TM} (1)	I_{TM} = 35 A t_p = 380 µs	T_j = 25° C	MAX.	1.55	V
V_{t0} (1)	Threshold voltage	T_j = 125° C	MAX.	0.85	V
R_d (1)	Dynamic resistance	T_j = 125° C	MAX.	16	mΩ
I_{DRM} I_{RRM}	$V_{DRM} = V_{RRM}$	T_j = 25° C	MAX.	5	µA
		T_j = 125° C		3	mA

1. for both polarities of A2 referenced to A1.

Table 6. Thermal resistance

Symbol	Parameter		Value	Unit
$R_{th(j-c)}$	Junction to case (AC)	TOP 3	0.6	° C/W
		D^2PAK / TO-220AB	0.8	
		RD91 Insulated / TOP3 Insulated	0.9	
		TO-220AB Insulated	1.7	
$R_{th(j-a)}$	Junction to ambient (1)S = 1 cm^2	D^2PAK	45	° C/W
		TOP3 / TOP3 Insulated	50	
		TO-220AB / TO-220AB Insulated	60	

1. S = Copper surface under tab.

Figure 1. Maximum power dissipation versus RMS on-state current (full cycle)

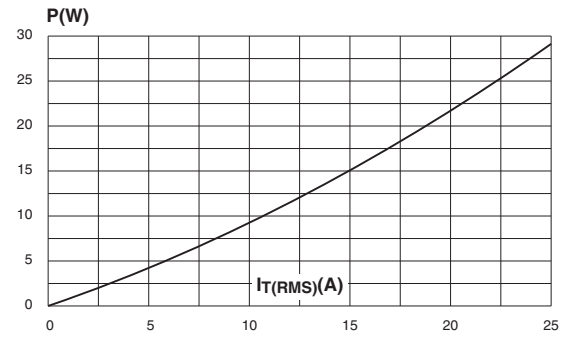

Figure 2. RMS on-state current versus case temperature (full cycle)

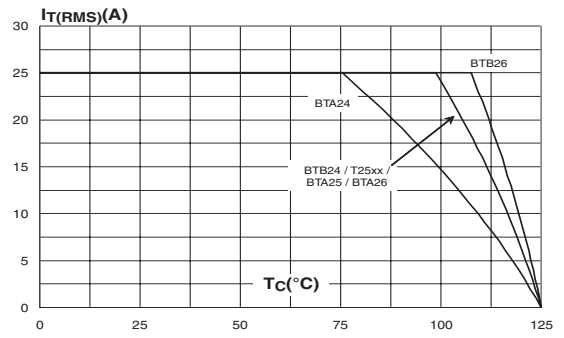

Figure 3. D^2PAK RMS on-state current versus ambient temperature (printed circuit board FR4, copper thickness: 35µm) (full cycle)

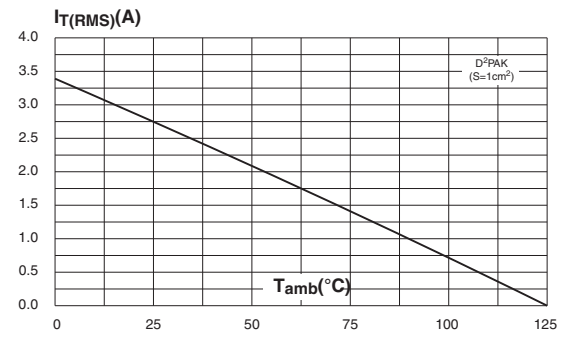

Figure 4. Relative variation of thermal impedance versus pulse duration

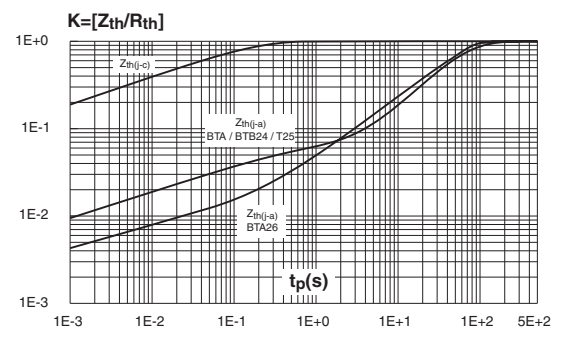

Figure 5. On-state characteristics (maximum values)

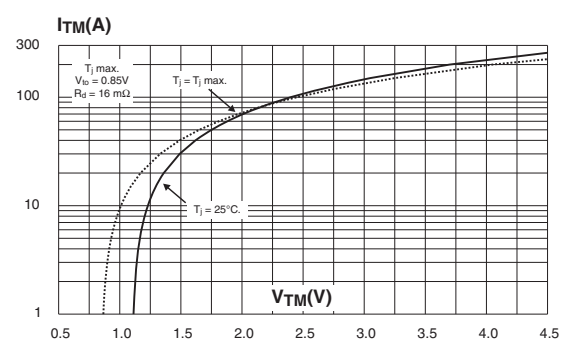

Figure 6. Surge peak on-state current versus number of cycles

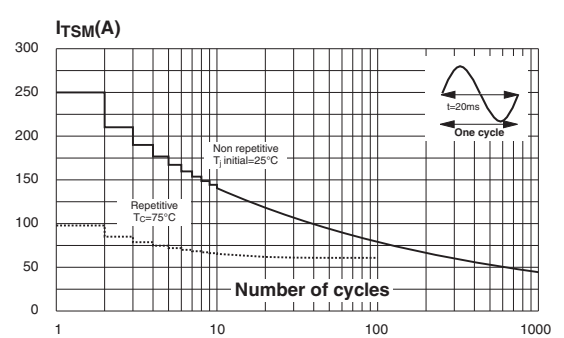

Figure 7. Non-repetitive surge peak on-state current for a sinusoidal pulse with width t_p < 10 ms and corresponding value of I^2t

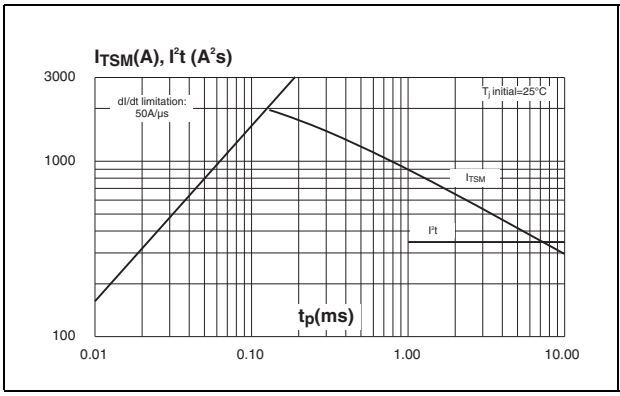

Figure 8. Relative variation of gate trigger current, holding current and latching current versus junction temperature (typical values)

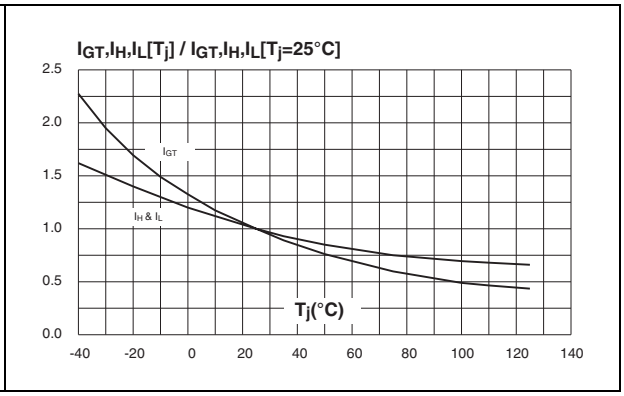

Figure 9. Relative variation of critical rate of decrease of main current versus (dV/dt)c (typical values)

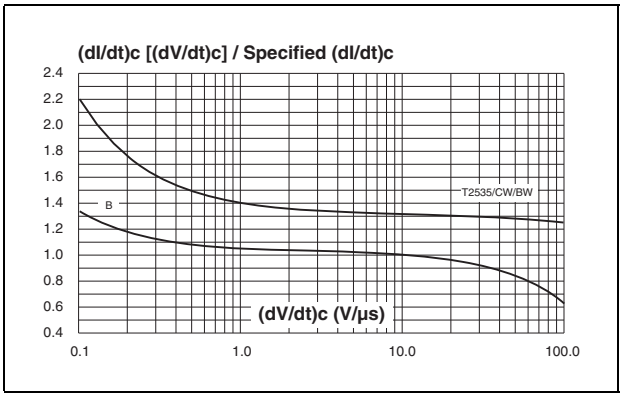

Figure 10. Relative variation of critical rate of decrease of main current versus T_j

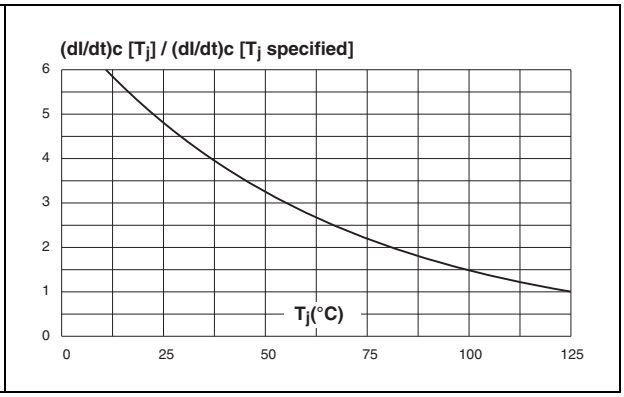

Figure 11. D^2PAK thermal resistance junction to ambient versus copper surface under tab (printed circuit board FR4, copper thickness: 35 µm)

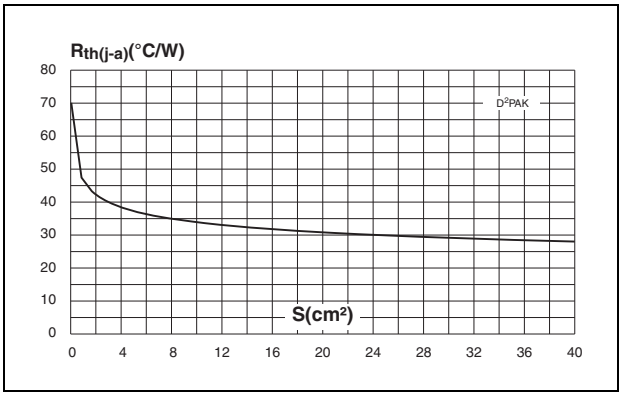

2 Ordering information scheme

Figure 12. BTA and BTB series

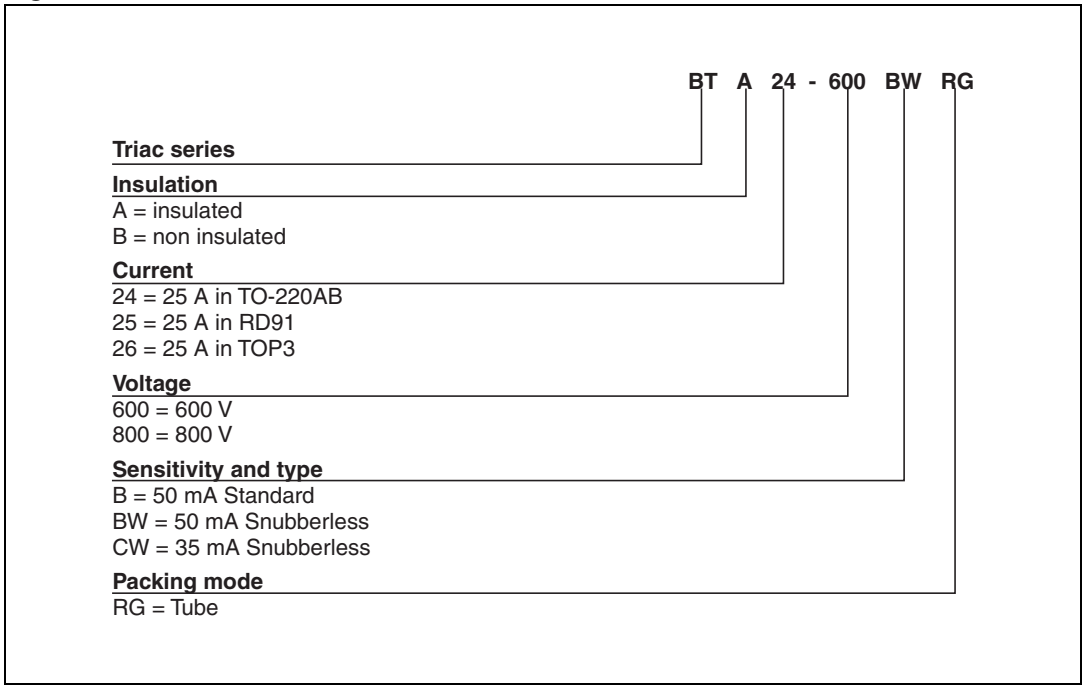

Figure 13. T25 series

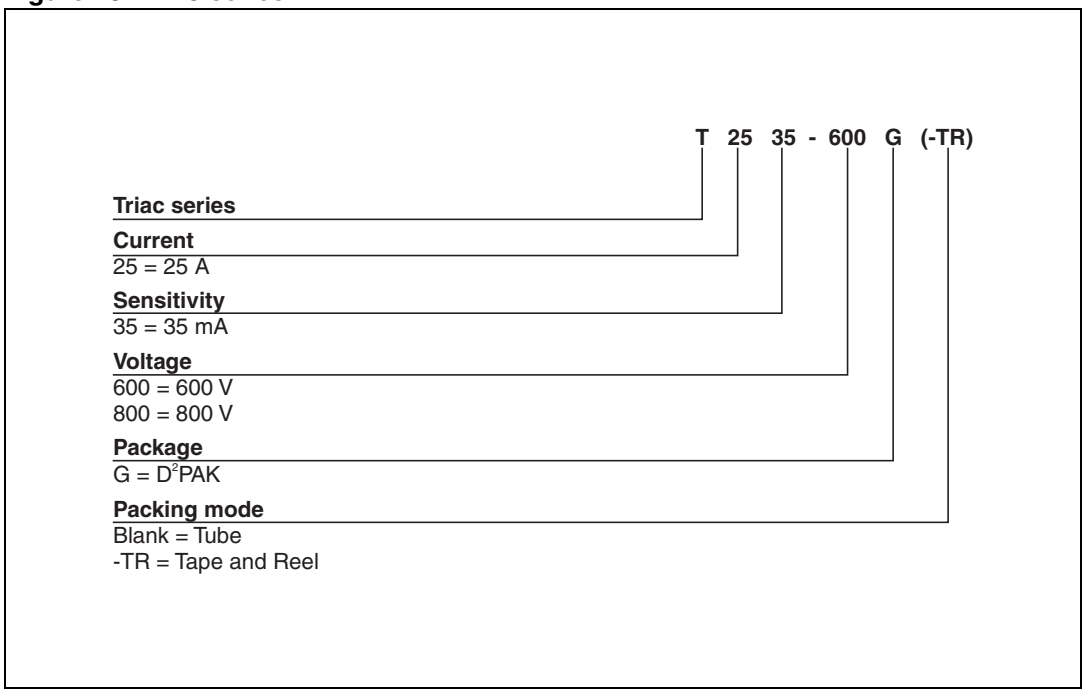

3 Package information

- Epoxy meets UL94,V0
- Cooling method: C
- Recommended torque value: 0.4 - 0.5 Nm (TO-220AB), 0.9 - 1.2 Nm (TOP3 and RD91)
- Maximum torque value for BTB24 is 0.5 Nm

Table 7. D²PAK dimensions

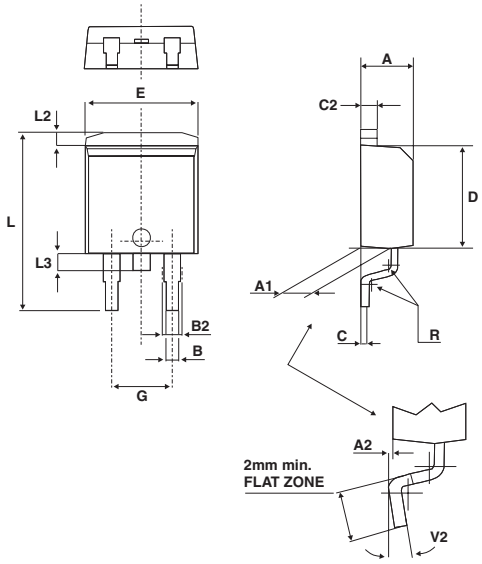

REF.	DIMENSIONS					
	Millimeters			Inches		
	Min.	Typ.	Max.	Min.	Typ.	Max.
A	4.30		4.60	0.169		0.181
A1	2.49		2.69	0.098		0.106
A2	0.03		0.23	0.001		0.009
B	0.70		0.93	0.027		0.037
B2	1.25	1.40		0.048	0.055	
C	0.45		0.60	0.017		0.024
C2	1.21		1.36	0.047		0.054
D	8.95		9.35	0.352		0.368
E	10.00		10.28	0.393		0.405
G	4.88		5.28	0.192		0.208
L	15.00		15.85	0.590		0.624
L2	1.27		1.40	0.050		0.055
L3	1.40		1.75	0.055		0.069
R		0.40			0.016	
V2	0°		8°	0°		8°

Figure 14. D²PAK footprint dimensions (in millimeters)

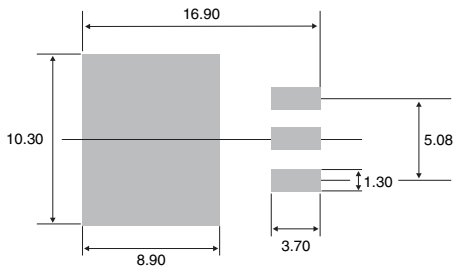

Table 8. RD91 dimensions

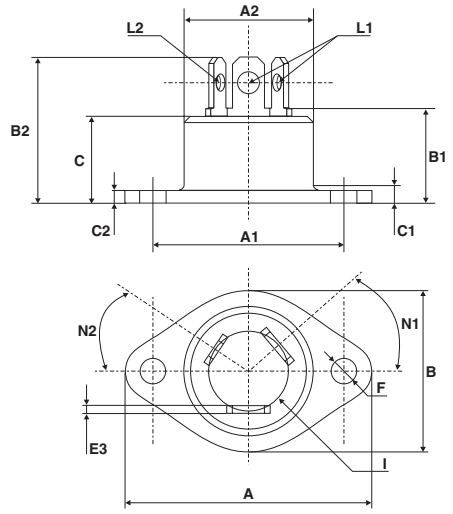

REF.	DIMENSIONS			
	Millimeters		Inches	
	Min.	Max.	Min.	Max.
A		40.00		1.575
A1	29.90	30.30	1.177	1.193
A2		22.00		0.867
B		27.00		1.063
B1	13.50	16.50	0.531	0.650
B2		24.00		0.945
C		14.00		0.551
C1		3.50		0.138
C2	1.95	3.00	0.077	0.118
E3	0.70	0.90	0.027	0.035
F	4.00	4.50	0.157	0.177
I	11.20	13.60	0.441	0.535
L1	3.10	3.50	0.122	0.138
L2	1.70	1.90	0.067	0.075
N1	33°	43°	33°	43°
N2	28°	38°	28°	38°

Table 9. TOP3 (insulated and non_insulated) dimensions

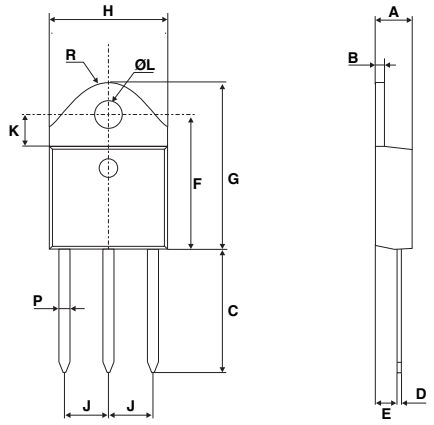

REF.	DIMENSIONS					
	Millimeters			Inches		
	Min.	Typ.	Max.	Min.	Typ.	Max.
A	4.4		4.6	0.173		0.181
B	1.45		1.55	0.057		0.061
C	14.35		15.60	0.565		0.614
D	0.5		0.7	0.020		0.028
E	2.7		2.9	0.106		0.114
F	15.8		16.5	0.622		0.650
G	20.4		21.1	0.815		0.831
H	15.1		15.5	0.594		0.610
J	5.4		5.65	0.213		0.222
K	3.4		3.65	0.134		0.144
ØL	4.08		4.17	0.161		0.164
P	1.20		1.40	0.047		0.055
R		4.60			0.181	

Table 10. TO-220AB (insulated and non-insulated) dimensions

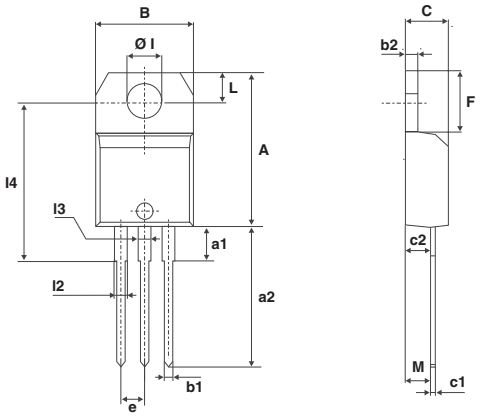

REF.	DIMENSIONS					
	Millimeters			Inches		
	Min.	Typ.	Max.	Min.	Typ.	Max.
A	15.20		15.90	0.598		0.625
a1		3.75			0.147	
a2	13.00		14.00	0.511		0.551
B	10.00		10.40	0.393		0.409
b1	0.61		0.88	0.024		0.034
b2	1.23		1.32	0.048		0.051
C	4.40		4.60	0.173		0.181
c1	0.49		0.70	0.019		0.027
c2	2.40		2.72	0.094		0.107
e	2.40		2.70	0.094		0.106
F	6.20		6.60	0.244		0.259
ØI	3.75		3.85	0.147		0.151
l4	15.80	16.40	16.80	0.622	0.646	0.661
L	2.65		2.95	0.104		0.116
l2	1.14		1.70	0.044		0.066
l3	1.14		1.70	0.044		0.066
M		2.60			0.102	

In order to meet environmental requirements, ST offers these devices in ECOPACK® packages. These packages have a lead-free second level interconnect. The category of second level interconnect is marked on the package and on the inner box label, in compliance with JEDEC Standard JESD97. The maximum ratings related to soldering conditions are also marked on the inner box label. ECOPACK is an ST trademark. ECOPACK specifications are available at: www.st.com.

4 Ordering information

Table 11. Ordering information

Ordering type	Marking	Package	Weight	Base qty	Delivery mode
BTA/BTB24-xxxyzRG	BTA/BTB24 xxxyz	TO-220AB	2.3 g	50	Tube
BTA25-xxxyz	BTA25xxxyz	RD91	20 g	25	Bulk
BTA26-xxxyRG	BTA26xxxyz	TOP3 Ins.	4.5 g	30	Tube
BTB26-600BRG	BTB26600B	TOP3	4.5 g	30	Tube
T2535-xxxG	T2535 xxxG	D^2PAK	1.5 g	50	Tube
T2535-xxxG-TR	T2535 xxxG			1000	Tape and reel

Note: xxx = voltage, y = sensitivity, z = type

5 Revision history

Table 12. Revision history

Date	Revision	Description of changes
Oct-2002	6A	Previous update.
13-Feb-2006	7	TO-220AB delivery mode changed from bulk to tube. ECOPACK statement added.
31-May-2006	8	Reformatted to current standard. T_c in figure 3 changed to T_{amb}
31-Jul-2006	9	Typing error corrected on page 1 (BTB124 instead of BTB24)
05-Jul-2007	10	Added BTB26-600BRG. Restructured cover page and section *2: Ordering information scheme on page 6* to simplify product selection. Thermal resistance values updated in *Table 6* and *Figure 2*. Graphic for I^2t updated in *Figure 7*.

Please Read Carefully:

Information in this document is provided solely in connection with ST products. STMicroelectronics NV and its subsidiaries (“ST”) reserve the right to make changes, corrections, modifications or improvements, to this document, and the products and services described herein at any time, without notice.

All ST products are sold pursuant to ST’s terms and conditions of sale.

Purchasers are solely responsible for the choice, selection and use of the ST products and services described herein, and ST assumes no liability whatsoever relating to the choice, selection or use of the ST products and services described herein.

No license, express or implied, by estoppel or otherwise, to any intellectual property rights is granted under this document. If any part of this document refers to any third party products or services it shall not be deemed a license grant by ST for the use of such third party products or services, or any intellectual property contained therein or considered as a warranty covering the use in any manner whatsoever of such third party products or services or any intellectual property contained therein.

UNLESS OTHERWISE SET FORTH IN ST’S TERMS AND CONDITIONS OF SALE ST DISCLAIMS ANY EXPRESS OR IMPLIED WARRANTY WITH RESPECT TO THE USE AND/OR SALE OF ST PRODUCTS INCLUDING WITHOUT LIMITATION IMPLIED WARRANTIES OF MERCHANTABILITY, FITNESS FOR A PARTICULAR PURPOSE (AND THEIR EQUIVALENTS UNDER THE LAWS OF ANY JURISDICTION), OR INFRINGEMENT OF ANY PATENT, COPYRIGHT OR OTHER INTELLECTUAL PROPERTY RIGHT.

UNLESS EXPRESSLY APPROVED IN WRITING BY AN AUTHORIZED ST REPRESENTATIVE, ST PRODUCTS ARE NOT RECOMMENDED, AUTHORIZED OR WARRANTED FOR USE IN MILITARY, AIR CRAFT, SPACE, LIFE SAVING, OR LIFE SUSTAINING APPLICATIONS, NOR IN PRODUCTS OR SYSTEMS WHERE FAILURE OR MALFUNCTION MAY RESULT IN PERSONAL INJURY, DEATH, OR SEVERE PROPERTY OR ENVIRONMENTAL DAMAGE. ST PRODUCTS WHICH ARE NOT SPECIFIED AS "AUTOMOTIVE GRADE" MAY ONLY BE USED IN AUTOMOTIVE APPLICATIONS AT USER’S OWN RISK.

Resale of ST products with provisions different from the statements and/or technical features set forth in this document shall immediately void any warranty granted by ST for the ST product or service described herein and shall not create or extend in any manner whatsoever, any liability of ST.

ST and the ST logo are trademarks or registered trademarks of ST in various countries.

Information in this document supersedes and replaces all information previously supplied.

The ST logo is a registered trademark of STMicroelectronics. All other names are the property of their respective owners.

© 2007 STMicroelectronics - All rights reserved

STMicroelectronics group of companies

Australia - Belgium - Brazil - Canada - China - Czech Republic - Finland - France - Germany - Hong Kong - India - Israel - Italy - Japan - Malaysia - Malta - Morocco - Singapore - Spain - Sweden - Switzerland - United Kingdom - United States of America

www.st.com