聯陽半導體
ITE Tech. Inc.

IT8512E/F

Embedded Controller

Preliminary Specification 0.4.1

ITE TECH. INC.

Specification subject to Change without notice, AS IS and for reference only. For purchasing, please contact sales representatives.

Copyright © 2006 ITE Tech. Inc.

This is Preliminary document release. All specifications are subject to change without notice.
The material contained in this document supersedes all previous documentation issued for the related products included herein. Please contact ITE Tech. Inc. for the latest document(s). All sales are subject to ITE's Standard Terms and Conditions, a copy of which is included in the back of this document.

ITE, IT8512E/F is a trademark of ITE Tech. Inc.
All other trademarks are claimed by their respective owners.
All specifications are subject to change without notice.

Additional copies of this manual or other ITE literature may be obtained from:

ITE Tech. Inc.
Marketing Department
8F, No. 233-1, Bao Chiao RD., Hsin Tien,
Taipei County 231, Taiwan, R.O.C.

Phone: (02) 2912-6889
Fax: (02) 2910-2551, 2910-2552

If you have any marketing or sales questions, please contact:

P.Y. Chang, at ITE Taiwan: E-mail: p.y.chang@ite.com.tw, Tel: 886-2-29126889 X6052, Fax: 886-2-29102551

To find out more about ITE, visit our World Wide Web at:

http://www.ite.com.tw

Or e-mail **itesupport@ite.com.tw** for more product information/services

Revision History

Section	Revision	Page No.
5	• In Table 5-3. Pin Descriptions of External Serial Flash Interface, the attribute of 102 and 103 was revised respectively.	16
5	• Table 5-18. Pin Descriptions of Power/Ground Signals was revised.	19
7	• In section 7.5.4 Alternate Function Selection, the followings were revised: 1. The values of the “output driving” for GPIOB3-4 and GPIOC1-2 were revised to “**4**“. 2. The values of the “output driving” for GPIOF6-7 were revised to “**4**“. 3. GPIOG0-1 support both “pull-up” and “pull-down”.	177

CONTENTS

1. Features 1
2. General Description 3
3. System Block Diagram 5
3.1 Block Diagram 5
3.2 Host/EC Mapped Memory Space 6
3.3 EC Mapped Memory Space 9
3.4 Register Abbreviation 10
4. Pin Configuration 11
4.1 Top View 11
5. Pin Descriptions 15
5.1 Pin Descriptions 15
5.2 Chip Power Planes and Power States 21
5.3 Pin Power Planes and States 22
5.4 PWRFAIL# Interrupt to INTC 25
5.5 Reset Sources and Types 26
5.5.1 Relative Interrupts to INTC 26
5.6 Chip Power Mode and Clock Domain 27
5.7 Pins with Pull, Schmitt-Trigger or Open-Drain Function 31
5.8 Power Consumption Consideration 32
6. Host Domain Functions 35
6.1 Low Pin Count Interface 35
6.1.1 Overview 35
6.1.2 Features 35
6.1.3 Accepted LPC Cycle Type 35
6.1.4 Debug Port Function 36
6.1.5 Serialized IRQ (SERIRQ) 36
6.1.6 Relative Interrupts to WUC 37
6.1.7 LPCPD# 37
6.1.8 Check Items 37
6.2 Plug and Play Configuration (PNPCFG) 38
6.2.1 Logical Device Assignment 40
6.2.2 Super I/O Configuration Registers 41
6.2.2.1 Logical Device Number (LDN) 41
6.2.2.2 Chip ID Byte 1 (CHIPID1) 41
6.2.2.3 Chip ID Byte 2 (CHIPID2) 41
6.2.2.4 Chip Version (CHIPVER) 41
6.2.2.5 Super I/O Control Register (SIOCTRL) 42
6.2.2.6 Super I/O IRQ Configuration Register (SIOIRQ) 42
6.2.2.7 Super I/O General Purpose Register (SIOGP) 42
6.2.2.8 Super I/O Power Mode Register (SIOPWR) 43
6.2.3 Standard Logical Device Configuration Registers 43
6.2.3.1 Logical Device Activate Register (LDA) 43
6.2.3.2 I/O Port Base Address Bits [15:8] for Descriptor 0 (IOBAD0[15:8]) 43
6.2.3.3 I/O Port Base Address Bits [7:0] for Descriptor 0 (IOBAD0[7:0]) 44
6.2.3.4 I/O Port Base Address Bits [15:8] for Descriptor 1 (IOBAD1[15:8]) 44
6.2.3.5 I/O Port Base Address Bits [7:0] for Descriptor 1 (IOBAD1[7:0]) 44
6.2.3.6 Interrupt Request Number and Wake-Up on IRQ Enable (IRQNUMX) 44
6.2.3.7 Interrupt Request Type Select (IRQTP) 45
6.2.3.8 DMA Channel Select 0 (DMAS0) 45
6.2.3.9 DMA Channel Select 0 (DMAS1) 45
6.2.4 System Wake-Up Control (SWUC) Configuration Registers 46
6.2.4.1 Logical Device Activate Register (LDA) 46

6.2.4.2 I/O Port Base Address Bits [15:8] for Descriptor 0 (IOBAD0[15:8]) 46
6.2.4.3 I/O Port Base Address Bits [7:0] for Descriptor 0 (IOBAD0[7:0]) 46
6.2.4.4 I/O Port Base Address Bits [15:8] for Descriptor 1 (IOBAD1[15:8]) 46
6.2.4.5 I/O Port Base Address Bits [7:0] for Descriptor 1 (IOBAD1[7:0]) 47
6.2.4.6 Interrupt Request Number and Wake-Up on IRQ Enable (IRQNUMX)..... 47
6.2.4.7 Interrupt Request Type Select (IRQTP) 47
6.2.5 KBC / Mouse Interface Configuration Registers 47
6.2.5.1 Logical Device Activate Register (LDA)..... 47
6.2.5.2 I/O Port Base Address Bits [15:8] for Descriptor 0 (IOBAD0[15:8]) 47
6.2.5.3 I/O Port Base Address Bits [7:0] for Descriptor 0 (IOBAD0[7:0]) 48
6.2.5.4 I/O Port Base Address Bits [15:8] for Descriptor 1 (IOBAD1[15:8]) 48
6.2.5.5 I/O Port Base Address Bits [7:0] for Descriptor 1 (IOBAD1[7:0]) 48
6.2.5.6 Interrupt Request Number and Wake-Up on IRQ Enable (IRQNUMX)..... 48
6.2.5.7 Interrupt Request Type Select (IRQTP) 48
6.2.6 KBC / Keyboard Interface Configuration Registers..... 48
6.2.6.1 Logical Device Activate Register (LDA)..... 49
6.2.6.2 I/O Port Base Address Bits [15:8] for Descriptor 0 (IOBAD0[15:8]) 49
6.2.6.3 I/O Port Base Address Bits [7:0] for Descriptor 0 (IOBAD0[7:0]) 49
6.2.6.4 I/O Port Base Address Bits [15:8] for Descriptor 1 (IOBAD1[15:8]) 49
6.2.6.5 I/O Port Base Address Bits [7:0] for Descriptor 1 (IOBAD1[7:0]) 49
6.2.6.6 Interrupt Request Number and Wake-Up on IRQ Enable (IRQNUMX)..... 49
6.2.6.7 Interrupt Request Type Select (IRQTP) 49
6.2.7 Shared Memory/Flash Interface (SMFI) Configuration Registers 50
6.2.7.1 Logical Device Activate Register (LDA)..... 50
6.2.7.2 I/O Port Base Address Bits [15:8] for Descriptor 0 (IOBAD0[15:8]) 50
6.2.7.3 I/O Port Base Address Bits [7:0] for Descriptor 0 (IOBAD0[7:0]) 50
6.2.7.4 I/O Port Base Address Bits [15:8] for Descriptor 1 (IOBAD1[15:8]) 50
6.2.7.5 I/O Port Base Address Bits [7:0] for Descriptor 1 (IOBAD1[7:0]) 51
6.2.7.6 Interrupt Request Number and Wake-Up on IRQ Enable (IRQNUMX)..... 51
6.2.7.7 Interrupt Request Type Select (IRQTP) 51
6.2.7.8 Shared Memory Configuration Register (SHMC)..... 51
6.2.8 BRAMLD Configuration Registers..... 52
6.2.8.1 Logical Device Activate Register (LDA)..... 52
6.2.8.2 I/O Port Base Address Bits [15:8] for Descriptor 0 (IOBAD0[15:8]) 52
6.2.8.3 I/O Port Base Address Bits [7:0] for Descriptor 0 (IOBAD0[7:0]) 52
6.2.8.4 I/O Port Base Address Bits [15:8] for Descriptor 1 (IOBAD1[15:8]) 52
6.2.8.5 I/O Port Base Address Bits [7:0] for Descriptor 1 (IOBAD1[7:0]) 53
6.2.8.6 Interrupt Request Number and Wake-Up on IRQ Enable (IRQNUMX)..... 53
6.2.8.7 Interrupt Request Type Select (IRQTP) 53
6.2.8.8 P80L Begin Index (P80LB)..... 53
6.2.8.9 P80L End Index (P80LE)..... 53
6.2.8.10 P80L Current Index (P80LC)..... 53
6.2.9 Power Management I/F Channel 1 Configuration Registers..... 54
6.2.9.1 Logical Device Activate Register (LDA)..... 54
6.2.9.2 I/O Port Base Address Bits [15:8] for Descriptor 0 (IOBAD0[15:8]) 54
6.2.9.3 I/O Port Base Address Bits [7:0] for Descriptor 0 (IOBAD0[7:0]) 54
6.2.9.4 I/O Port Base Address Bits [15:8] for Descriptor 1 (IOBAD1[15:8]) 54
6.2.9.5 I/O Port Base Address Bits [7:0] for Descriptor 1 (IOBAD1[7:0]) 55
6.2.9.6 Interrupt Request Number and Wake-Up on IRQ Enable (IRQNUMX)..... 55
6.2.9.7 Interrupt Request Type Select (IRQTP) 55
6.2.10 Power Management I/F Channel 2 Configuration Registers..... 55
6.2.10.1 Logical Device Activate Register (LDA)..... 55
6.2.10.2 I/O Port Base Address Bits [15:8] for Descriptor 0 (IOBAD0[15:8]) 56
6.2.10.3 I/O Port Base Address Bits [7:0] for Descriptor 0 (IOBAD0[7:0]) 56
6.2.10.4 I/O Port Base Address Bits [15:8] for Descriptor 1 (IOBAD1[15:8]) 56
6.2.10.5 I/O Port Base Address Bits [7:0] for Descriptor 1 (IOBAD1[7:0]) 56

6.2.10.6 I/O Port Base Address Bits [15:8] for Descriptor 2 (IOBAD2[15:8]) 56
6.2.10.7 I/O Port Base Address Bits [7:0] for Descriptor 2 (IOBAD2[7:0]) 56
6.2.10.8 Interrupt Request Number and Wake-Up on IRQ Enable (IRQNUMX) 57
6.2.10.9 Interrupt Request Type Select (IRQTP) 57
6.2.11 Programming Guide 58
6.3 Shared Memory Flash Interface Bridge (SMFI) 60
6.3.1 Overview 60
6.3.2 Features 60
6.3.3 Function Description 60
6.3.3.1 Supported Flash 60
6.3.3.2 Host to M Bus Translation 60
6.3.3.3 Memory Mapping 60
6.3.3.4 Host-Indirect Memory Read/Write Transaction 61
6.3.3.5 EC-Indirect Memory Read/Write Transaction 61
6.3.3.6 Locking Between Host and EC Domains 62
6.3.3.7 Host Access Protection 62
6.3.3.8 LPC/FWH Flash Performance Consideration 63
6.3.3.9 Serial Flash Performance Consideration 63
6.3.3.10 Response to a Forbidden Access 63
6.3.3.11 Scratch SRAM 63
6.3.3.12 DMA for Scratch SRAM 64
6.3.3.13 Trusted ROM/RAM 65
6.3.3.14 Flash Programming via Host LPC Interface with Scratch SRAM 65
6.3.3.15 Force 8032 to Code Fetch from Internal SRAM 66
6.3.3.16 Force 8032 to Clear Dynamic Caches 66
6.3.3.17 Serial Flash Programming 66
6.3.4 EC Interface Registers 66
6.3.4.1 FBIU Configuration Register (FBCFG) 68
6.3.4.2 Flash Programming Configuration Register (FPCFG) 69
6.3.4.3 Flash EC Code Banking Select Register (FECBSR) 70
6.3.4.4 Flash Memory Size Select Register (FMSSR) 71
6.3.4.5 Shared Memory EC Control and Status Register (SMECCS) 72
6.3.4.6 Shared Memory Host Semaphore Register (SMHSR) 73
6.3.4.7 Shared Memory EC Override Read Protect Registers 0-1 (SMECORPR0-1) 73
6.3.4.8 Shared Memory EC Override Write Protect Registers 0-1 (SMECOWPR0-1) 73
6.3.4.9 FWH Flash ID Register (FWHFIDR) 74
6.3.4.10 Flash Control 1 Register (FLHCTRL1R) 74
6.3.4.11 Flash Control 2 Register (FLHCTRL2R) 75
6.3.4.12 uC Control Register (UCCTRLR) 75
6.3.4.13 Host Control 2 Register (HCTRL2R) 75
6.3.4.14 Trusted ROM Register (TROMR) 76
6.3.4.15 EC-Indirect Memory Address Register 0 (ECINDAR0) 76
6.3.4.16 EC-Indirect Memory Address Register 1 (ECINDAR1) 76
6.3.4.17 EC-Indirect Memory Address Register 2 (ECINDAR2) 76
6.3.4.18 EC-Indirect Memory Address Register 3 (ECINDAR3) 76
6.3.4.19 EC-Indirect Memory Data Register (ECINDDR) 77
6.3.4.20 Scratch SRAM 0 Address Low Byte Register (SCAR0L) 77
6.3.4.21 Scratch SRAM 0 Address Middle Byte Register (SCAR0M) 77
6.3.4.22 Scratch SRAM 0 Address High Byte Register (SCAR0H) 77
6.3.4.23 Scratch SRAM 1 Address Low Byte Register (SCAR1L) 77
6.3.4.24 Scratch SRAM 1 Address Middle Byte Register (SCAR1M) 77
6.3.4.25 Scratch SRAM 1 Address High Byte Register (SCAR1H) 78
6.3.4.26 Scratch SRAM 2 Address Low Byte Register (SCAR2L) 78
6.3.4.27 Scratch SRAM 2 Address Middle Byte Register (SCAR2M) 78
6.3.4.28 Scratch SRAM 2 Address High Byte Register (SCAR2H) 78
6.3.4.29 Scratch SRAM 3 Address Low Byte Register (SCAR3L) 78

6.3.4.30 Scratch SRAM 3 Address Middle Byte Register (SCAR3M) 78
6.3.4.31 Scratch SRAM 3 Address High Byte Register (SCAR3H) 79
6.3.4.32 Scratch SRAM 4 Address Low Byte Register (SCAR4L) 79
6.3.4.33 Scratch SRAM 4 Address Middle Byte Register (SCAR4M) 79
6.3.4.34 Scratch SRAM 4 Address High Byte Register (SCAR4H) 79
6.3.5 Host Interface Registers 80
6.3.5.1 Shared Memory Indirect Memory Address Register 0 (SMIMAR0) 80
6.3.5.2 Shared Memory Indirect Memory Address Register 1 (SMIMAR1) 80
6.3.5.3 Shared Memory Indirect Memory Address Register 2 (SMIMAR2) 80
6.3.5.4 Shared Memory Indirect Memory Address Register 3 (SMIMAR3) 80
6.3.5.5 Shared Memory Indirect Memory Data Register (SMIMDR) 80
6.3.5.6 Shared Memory Host Semaphore Register (SMHSR) 81
6.3.5.7 M-Bus Control Register (MBCTRL) 81
6.4 System Wake-Up Control (SWUC) 83
6.4.1 Overview 83
6.4.2 Features 83
6.4.3 Functional Description 83
6.4.3.1 Wake-Up Status 83
6.4.3.2 Wake-Up Events 84
6.4.3.3 Wake-Up Output Events 85
6.4.3.4 Other SWUC Controlled Options 85
6.4.4 Host Interface Registers 86
6.4.4.1 Wake-Up Event Status Register (WKSTR) 87
6.4.4.2 Wake-Up Event Enable Register (WKER) 88
6.4.4.3 Wake-Up Signals Monitor Register (WKSMR) 88
6.4.4.4 Wake-Up ACPI Status Register (WKACPIR) 89
6.4.4.5 Wake-Up SMI Enable Register (WKSMIER) 89
6.4.4.6 Wake-Up IRQ Enable Register (WKIRQER) 90
6.4.5 EC Interface Registers 90
6.4.5.1 SWUC Control Status 1 Register (SWCTL1) 91
6.4.5.2 SWUC Control Status 2 Register (SWCTL2) 92
6.4.5.3 SWUC Control Status 3 Register (SWCTL3) 92
6.4.5.4 SWUC Host Configuration Base Address Low Byte Register (SWCBALR) 92
6.4.5.5 SWUC Host Configuration Base Address High Byte Register (SWCBAHR) 93
6.4.5.6 SWUC Interrupt Enable Register (SWCIER) 93
6.4.5.7 SWUC Host Event Status Register (SWCHSTR) 94
6.4.5.8 SWUC Host Event Interrupt Enable Register (SWCHIER) 95
6.5 Keyboard Controller (KBC) 96
6.5.1 Overview 96
6.5.2 Features 96
6.5.3 Functional Description 96
6.5.4 Host Interface Registers 97
6.5.4.1 KBC Data Input Register (KBDIR) 98
6.5.4.2 KBC Data Output Register (KBDOR) 98
6.5.4.3 KBC Command Register (KBCMDR) 98
6.5.4.4 KBC Status Register (KBSTR) 98
6.5.5 EC Interface Registers 99
6.5.5.1 KBC Host Interface Control Register (KBHICR) 99
6.5.5.2 KBC Interrupt Control Register (KBIRQR) 100
6.5.5.3 KBC Host Interface Keyboard/Mouse Status Register (KBHISR) 101
6.5.5.4 KBC Host Interface Keyboard Data Output Register (KBHIKDOR) 101
6.5.5.5 KBC Host Interface Mouse Data Output Register (KBHIMDOR) 101
6.5.5.6 KBC Host Interface Keyboard/Mouse Data Input Register (KBHIDIR) 102
6.6 Power Management Channel (PMC) 103
6.6.1 Overview 103
6.6.2 Features 103

6.6.3 Functional Description 103
6.6.3.1 General Description 103
6.6.3.2 Compatible Mode 104
6.6.3.3 Enhanced PM mode 105
6.6.3.4 PMC2EX 106
6.6.4 Host Interface Registers 107
6.6.4.1 PMC Data Input Register (PMDIR) 107
6.6.4.2 PMC Data Output Register (PMDOR) 108
6.6.4.3 PMC Command Register (PMCMDR) 108
6.6.4.4 Status Register (PMSTR) 108
6.6.5 EC Interface Registers 109
6.6.5.1 PM Status Register (PMSTS) 110
6.6.5.2 PM Data Out Port (PMDO) 110
6.6.5.3 PM Data Out Port with SCI (PMDOSCI) 110
6.6.5.4 PM Data Out Port with SMI (PMDOSMI) 111
6.6.5.5 PM Data In Port (PMDI) 111
6.6.5.6 PM Data In Port with SCI (PMDISCI) 111
6.6.5.7 PM Control (PMCTL) 112
6.6.5.8 PM Interrupt Control (PMIC) 113
6.6.5.9 PM Interrupt Enable (PMIE) 114
6.6.5.10 PM Interrupt Enable (PMIE) 114
6.6.5.11 16-byte PMC2EX Mailbox 0-15 (MBXEC0-15) 114
6.7 Trusted Mobile KBC (TMKBC) 115
6.7.1 Overview 115
6.7.2 Features 115
6.7.3 Functional Description 115
6.7.4 Host Interface Registers 115
6.7.4.1 TMKBC Vendor ID Register (TVENDID) 115
6.7.4.2 TMKBC Device ID Register (TDEVID) 116
6.7.4.3 TMKBC Version Register (TVER) 116
6.7.4.4 Generic Capabilities Reporting Register (CAP) 116
6.7.4.5 TMKBC Revision ID Register (TREVID) 116
6.7.4.6 Configuration Register (CNF) 117
6.7.4.7 Control Register (CNT) 117
6.7.4.8 IRQ Capabilities Reporting Register (IRQCAP) 118
6.7.4.9 Status Register (STS) 118
6.7.4.10 Extended Status Register (EXTSTS) 119
6.7.4.11 Interrupt Trigger Enable Register (INTTRIG) 119
6.7.4.12 TMKBC Data Input Register (TDATIN) 119
6.7.4.13 TMKBC Data Output Register (TDATOUT) 119
6.7.5 EC Interface Registers 120
6.7.5.1 EC Side Configuration Register (ECCON) 120
6.7.5.2 Status Control Register (STSCON) 121
6.7.5.3 EC Data Input Register (EDATIN) 121
6.7.5.4 EC Data Output Register (EDATOUT) 121
6.7.5.5 EC Buffer Status Register (EBUFSTS) 121
6.7.5.6 EC Status Register (ESTS) 122
6.7.5.7 EC Vendor ID Low Register (EVENL) 122
6.7.5.8 EC Vendor ID High Register (EVENH) 122
6.7.5.9 EC Device ID Low Register (EDEVL) 122
6.7.5.10 EC Device ID High Register (EDEVH) 122
6.7.5.11 EC Version Low Register (EVERL) 123
6.7.5.12 EC Version High Register (EVERH) 123
6.7.5.13 EC Revision ID Register (EREVID) 123
7. EC Domain Functions 125
7.1 8032 Embedded Controller (EC) 125

7.1.1 Overview 125
7.1.2 Features 125
7.1.3 General Description 125
7.1.4 Functional Description 125
7.1.5 Memory Organization 126
7.1.6 On-Chip Peripherals 126
7.1.7 Timer / Counter 129
Up/Down Counter Operation 132
7.1.8 Idle and Doze/Sleep Mode 138
7.1.9 EC Internal Register Description 139
7.1.9.1 Port 0 Register (P0R) 139
7.1.9.2 Stack Pointer Register (SPR) 139
7.1.9.3 Data Pointer Low Register (DPLR) 139
7.1.9.4 Data Pointer High Register (DPHR) 140
7.1.9.5 Data Pointer 1 Low Register (DP1LR) 140
7.1.9.6 Data Pointer 1 High Register (DP1HR) 140
7.1.9.7 Data Pointer Select Register (DPSR) 140
7.1.9.8 Power Control Register (PCON) 140
7.1.9.9 Timer Control Register (TCON) 141
7.1.9.10 Timer Mode Register (TMOD) 142
7.1.9.11 Timer 0 Low Byte Register (TL0R) 142
7.1.9.12 Timer 1 Low Byte Register (TL1R) 142
7.1.9.13 Timer 0 High Byte Register (TH0R) 142
7.1.9.14 Timer 1 Low Byte Register (TH1R) 143
7.1.9.15 Clock Control Register (CKCON) 143
7.1.9.16 Port 1 Register (P1R) 143
7.1.9.17 Serial Port Control Register (SCON) 144
7.1.9.18 Serial Port Buffer Register (SBUFR) 144
7.1.9.19 Port 2 Register (P2R) 144
7.1.9.20 Interrupt Enable Register (IE) 145
7.1.9.21 Port 3 Register (P3R) 145
7.1.9.22 Interrupt Priority Register (IP) 145
7.1.9.23 Status Register (STATUS) 146
7.1.9.24 Timer 2 Control Register (T2CON) 146
7.1.9.25 Timer Mode Register (T2MOD) 147
7.1.9.26 Timer 2 Capture Low Byte Register (RCAP2LR) 147
7.1.9.27 Timer 2 Capture High Byte Register (RCAP2HR) 147
7.1.9.28 Timer 2 Low Byte Register (TL2R) 147
7.1.9.29 Timer 2 High Byte Register (TH2R) 147
7.1.9.30 Program Status Word Register (PSW) 148
7.1.9.31 Watch Dog Timer Control Register (WDTCON) 148
7.1.9.32 Accumulator Register (ACC) 148
7.1.9.33 B Register (BR) 149
7.1.9.34 Manual Prefetch Register (MPREFC) 149
7.1.10 Programming Guide 149
7.1.10.1 IT8512 Coding Consideration 149
7.1.10.2 Code Snippet of Entering Idle/Doze/Sleep Mode 150
7.1.10.3 Code snippet of Copying Flash Content to Scratch ROM 4 (MOVC-MOVX by PIO) 151
7.1.10.4 Code snippet of Copying Flash Content to Scratch ROM (DMA) 152
7.1.10.5 Code snippet of Changing PLL Frequency 152
7.1.10.6 Code snippet of Clearing Dynamic Caches 153
7.2 Interrupt Controller (INTC) 154
7.2.1 Overview 154
7.2.2 Features 154
7.2.3 Functional Description 154

7.2.3.1 Power Fail Interrupt 154
7.2.3.2 ROM Match Interrupt 154
7.2.3.3 Programmable Interrupts 155
7.2.4 EC Interface Registers 155
7.2.4.1 Interrupt Status Register 0 (ISR0) 156
7.2.4.2 Interrupt Status Register 1 (ISR1) 156
7.2.4.3 Interrupt Status Register 2 (ISR2) 157
7.2.4.4 Interrupt Status Register 3 (ISR3) 157
7.2.4.5 Interrupt Enable Register 0 (IER0) 158
7.2.4.6 Interrupt Enable Register 1 (IER1) 158
7.2.4.7 Interrupt Enable Register 2 (IER2) 158
7.2.4.8 Interrupt Enable Register 3 (IER3) 158
7.2.4.9 Interrupt Edge/Level-Triggered Mode Register 0 (IELMR0) 158
7.2.4.10 Interrupt Edge/Level-Triggered Mode Register 1 (IELMR1) 159
7.2.4.11 Interrupt Edge/Level-Triggered Mode Register 2 (IELMR2) 159
7.2.4.12 Interrupt Edge/Level-Triggered Mode Register 3 (IELMR3) 159
7.2.4.13 Interrupt Polarity Register 0 (IPOLR0) 159
7.2.4.14 Interrupt Polarity Register 1 (IPOLR1) 160
7.2.4.15 Interrupt Polarity Register 2 (IPOLR2) 160
7.2.4.16 Interrupt Polarity Register 3 (IPOLR3) 160
7.2.4.17 Interrupt Vector Register (IVCT) 160
7.2.4.18 8032 INT0# Status (INT0ST) 161
7.2.4.19 Power Fail Register (PFAILR) 161
7.2.5 INTC Interrupt Assignments 162
7.2.6 Programming Guide 164
7.3 Wake-Up Control (WUC) 165
7.3.1 Overview 165
7.3.2 Features 165
7.3.3 Functional Description 165
7.3.4 EC Interface Registers 165
7.3.4.1 Wake-Up Edge Mode Register (WUEMR1) 165
7.3.4.2 Wake-Up Edge Mode Register (WUEMR2) 166
7.3.4.3 Wake-Up Edge Mode Register (WUEMR3) 166
7.3.4.4 Wake-Up Edge Mode Register (WUEMR4) 166
7.3.4.5 Wake-Up Edge Sense Register (WUESR1) 166
7.3.4.6 Wake-Up Edge Sense Register (WUESR2) 167
7.3.4.7 Wake-Up Edge Sense Register (WUESR3) 167
7.3.4.8 Wake-Up Edge Sense Register (WUESR4) 167
7.3.4.9 Wake-Up Enable Register (WUENR1) 168
7.3.4.10 Wake-Up Enable Register (WUENR2) 168
7.3.4.11 Wake-Up Enable Register (WUENR3) 168
7.3.4.12 Wake-Up Enable Register (WUENR4) 168
7.3.5 WUC Input Assignments 169
7.3.6 Programming Guide 170
7.4 Keyboard Matrix Scan Controller 171
7.4.1 Overview 171
7.4.2 Features 171
7.4.3 EC Interface Registers 171
7.4.3.1 Keyboard Scan Out Low Byte Data Register (KSOL) 171
7.4.3.2 Keyboard Scan Out High Byte Data 1 Register (KSOH1) 171
7.4.3.3 Keyboard Scan Out Control Register (KSOCTRL) 172
7.4.3.4 Keyboard Scan Out High Byte Data 2 Register (KSOH2) 172
7.4.3.5 Keyboard Scan In Data Register (KSIR) 172
7.4.3.6 Keyboard Scan In Control Register (KSICTRLR) 172
7.5 General Purpose I/O Port (GPIO) 173
7.5.1 Overview 173

7.5.2 Features 173
7.5.3 EC Interface Registers 173
7.5.3.1 General Control Register (GCR) 174
7.5.3.2 Port Data Registers A-J (GPDRA-GPDRJ) 174
7.5.3.3 Port Data Mirror Registers A-J (GPDMRA-GPDMRJ) 174
7.5.3.4 Port Control n Registers (GPCRn, n = A0-I7) 175
7.5.3.5 Output Type Registers H (GPOTH) 176
7.5.4 Alternate Function Selection 177
7.5.5 Programming Guide 181
7.6 EC Clock and Power Management Controller (ECPM) 182
7.6.1 Overview 182
7.6.2 Features 182
7.6.3 EC Interface Registers 182
7.6.3.1 Clock Gating Control 1 Register (CGCTRL1R) 183
7.6.3.2 Clock Gating Control 2 Register (CGCTRL2R) 184
7.6.3.3 Clock Gating Control 3 Register (CGCTRL3R) 184
7.6.3.4 PLL Control (PLLCTRL) 185
7.6.3.5 Auto Clock Gating (AUTOCG) 185
7.6.3.6 PLL Frequency (PLLFREQR) 186
7.7 SM Bus Interface (SMB) 187
7.7.1 Overview 187
7.7.2 Features 187
7.7.3 Functional Description 187
7.7.3.1 SMBUS Master Interface 187
7.7.3.2 SMBUS Porting Guide 188
7.7.4 EC Interface Registers 192
7.7.4.1 Host Status Register (HOSTA) 193
7.7.4.2 Host Control Register (HOCTL) 194
7.7.4.3 Host Command Register (HOCMD) 194
7.7.4.4 Transmit Slave Address Register (TRASLA) 195
7.7.4.5 Data 0 Register (D0REG) 195
7.7.4.6 Data 1 Register (D1REG) 195
7.7.4.7 Host Block Data Byte Register (HOBDB) 195
7.7.4.8 Packet Error Check Register (PECERC) 196
7.7.4.9 SMBUS Pin Control Register (SMBPCTL) 196
7.7.4.10 Host Control Register 2 (HOCTL2) 196
7.7.4.11 4.7 μs Low Register (4P7USL) 197
7.7.4.12 4.0 μs Low Register (4P0USL) 197
7.7.4.13 300 ns Register (300NSREG) 197
7.7.4.14 250 ns Register (250NSREG) 197
7.7.4.15 25 ms Register (25MSREG) 198
7.7.4.16 45.3 μs Low Register (45P3USLREG) 198
7.7.4.17 45.3 μs High Register (45P3USHREG) 198
7.7.4.18 4.7 μs And 4.0 μs High Register (4p7A4P0H) 198
7.8 PS/2 Interface 199
7.8.1 Overview 199
7.8.2 Features 199
7.8.3 Functional Description 199
7.8.3.1 Hardware Mode Selected 199
7.8.3.2 Software Mode Selected 200
7.8.4 EC Interface Registers 200
7.8.4.1 PS/2 Control Register 1-3 (PSCTL1-3) 201
7.8.4.2 PS/2 Interrupt Control Register 1-3 (PSINT1-3) 201
7.8.4.3 PS/2 Status Register 1-3 (PSSTS1-3) 202
7.8.4.4 PS/2 Data Register 1-3 (PSDAT1-3) 202
7.9 Digital To Analog Converter (DAC) 203

7.9.1 Overview 203
7.9.2 Feature 203
7.9.3 Functional Description 203
7.9.4 EC Interface Registers 203
7.9.4.1 DAC Enable Register (DACENREG) 204
7.9.4.2 DAC Power Down Register (DACPDREG) 205
7.9.4.3 DAC Data Channel 0~5 Register (DACDAT0~5) 205
7.10 Analog to Digital Converter (ADC) 206
7.10.1 Overview 206
7.10.2 Features 206
7.10.3 Functional Description 206
7.10.3.1 ADC General Description 207
7.10.3.2 Voltage Measurement and Automatic Hardware Calibration 207
7.10.3.3 ADC Operation 208
7.10.4 EC Interface Registers 209
7.10.4.1 ADC Status Register (ADCSTS) 210
7.10.4.2 ADC Configuration Register (ADCCFG) 211
7.10.4.3 ADC Clock Control Register (ADCCTL) 211
7.10.4.4 Voltage Channel 0 Control Register (VCH0CTL) 212
7.10.4.5 Calibration Data Control Register (KDCTL) 213
7.10.4.6 Voltage Channel 1 Control Register (VCH1CTL) 214
7.10.4.7 Volt Channel 1 Data Buffer LSB (VCH1DATL) 214
7.10.4.8 Volt Channel 1 Data Buffer MSB (VCH1DATM) 214
7.10.4.9 Voltage Channel 2 Control Register (VCH2CTL) 215
7.10.4.10 Volt Channel 2 Data Buffer LSB (VCH2DATL) 215
7.10.4.11 Volt Channel 2 Data Buffer MSB (VCH2DATM) 215
7.10.4.12 Voltage Channel 3 Control Register (VCHN3CTL) 215
7.10.4.13 Volt Channel 3 Data Buffer LSB (VCH3DATL) 215
7.10.4.14 Volt Channel 3 Data Buffer MSB (VCH3DATM) 216
7.10.4.15 Volt High Scale Calibration Data Buffer LSB (VHSCDBL) 216
7.10.4.16 Volt High Scale Calibration Data Buffer MSB (VHSCDBM) 216
7.10.4.17 Voltage Channel 0 Data Buffer LSB (VCH0DATL) 216
7.10.4.18 Voltage Channel 0 Data Buffer MSB (VCH0DATM) 217
7.10.4.19 Volt High Scale Gain-Error Calibration Data Buffer LSB (VHSGCDBL) 217
7.10.4.20 Volt High Scale Gain-Error Calibration Data Buffer MSB (VHSGCDBM) 217
7.10.5 ADC Programming Guide 218
7.11 PWM and SmartAuto Fan Control (PWM) 221
7.11.1 Overview 221
7.11.2 Features 221
7.11.3 Functional Description 221
7.11.3.1 General Description 221
7.11.3.2 CR256 Description 223
7.11.3.3 How to Decide CR256 Duty Time 223
7.11.3.4 How to Program CR256 PWM 224
7.11.3.5 SmartAuto Fan Control Mode 225
7.11.3.6 Manual Fan Control Mode 227
7.11.4 EC Interface Registers 228
7.11.4.1 Channel 0 Clock Prescaler Register (C0CPRS) 229
7.11.4.2 Cycle Time Register (CTR) 229
7.11.4.3 PWM Duty Cycle Register 0 to 7(DCRi) 229
7.11.4.4 PWM Polarity Register (PWMPOL) 229
7.11.4.5 Prescaler Clock Frequency Select Register (PCFSR) 230
7.11.4.6 Prescaler Clock Source Select Group Low (PCSSGL) 231
7.11.4.7 Prescaler Clock Source Select Group High (PCSSGH) 231
7.11.4.8 CR256 Prescaler Clock Source Select Group (CR256PCSSG) 232
7.11.4.9 Prescaler Clock Source Gating Register (PCSGR) 232

7.11.4.10 Fan 1 Configuration Register (FAN1CNF) 233
7.11.4.11 Fan 2 Configuration Register (FAN2CNF) 234
7.11.4.12 SmartAuto Fan Minimum-region Speed Range Register (AFMISRR) 234
7.11.4.13 SmartAuto Fan Maximum-region Speed Range Register (AFMASRR) 235
7.11.4.14 Min/Off PWM Limit Register (MOPL) 236
7.11.4.15 Fan 1 Minimum PWM Duty Cycle Register (F1MPDCR) 236
7.11.4.16 Fan 2 Minimum PWM Duty Cycle Register (F2MPDCR) 236
7.11.4.17 Fan 1 Temperature LIMIT Register (F1TLIMITR) 237
7.11.4.18 Fan 2 Temperature LIMIT Register (F2TLIMITR) 237
7.11.4.19 Fan 1 Absolute Temperature LIMIT Register (F1ATLIMITR) 237
7.11.4.20 Fan 2 Absolute Temperature LIMIT Register (F2ATLIMITR) 238
7.11.4.21 Zone Hysteresis Register (ZHYSR) 238
7.11.4.22 Fan 1 Temperature Record Register (F1TRR) 238
7.11.4.23 Fan 2 Temperature Record Register (F2TRR) 239
7.11.4.24 Fan 1 Tachometer LSB Reading Register (F1TLRR) 239
7.11.4.25 Fan 1 Tachometer MSB Reading Register (F1TMRR) 239
7.11.4.26 Fan 2 Tachometer LSB Reading Register (F2TLRR) 239
7.11.4.27 Fan 2 Tachometer MSB Reading Register (F2TMRR) 239
7.11.4.28 Zone Interrupt Status Control Register (ZINTSCR) 240
7.11.4.29 Zone Temperature Interrupt Enable Register (ZTIER) 240
7.11.4.30 Channel 4 Clock Prescaler Register (C4CPRS) 241
7.11.4.31 Channel 4 Clock Prescaler MSB Register (C4MCPRS) 241
7.11.4.32 Channel 6 Clock Prescaler Register (C6CPRS) 241
7.11.4.33 Channel 6 Clock Prescaler MSB Register (C6MCPRS) 241
7.11.4.34 Channel 7 Clock Prescaler Register (C7CPRS) 242
7.11.4.35 Channel 7 Clock Prescaler MSB Register (C7MCPRS) 242
7.11.4.36 Fan 1 Temperature Criterion Register 1-3 (F1TC1-3) 242
7.11.4.37 Fan 2 Temperature Criterion Register 1-3(F2TC1-3) 243
7.11.4.38 Fan 1 PWM Duty Cycle Criterion Register 1-3(F1PDC1-3) 243
7.11.4.39 Fan 2 PWM Duty Cycle Criterion Register 1-3(F2PDC1-3) 243
7.11.5 PWM Programming Guide 244
7.12 EC Access to Host Controlled Modules (EC2I Bridge) 246
7.12.1 Overview 246
7.12.2 Features 246
7.12.3 Functional Description 246
7.12.4 EC Interface Registers 246
7.12.4.1 Indirect Host I/O Address Register (IHIOA) 247
7.12.4.2 Indirect Host Data Register (IHD) 247
7.12.4.3 Lock Super I/O Host Access Register (LSIOHA) 247
7.12.4.4 Super I/O Access Lock Violation Register (SIOLV) 248
7.12.4.5 EC to I-Bus Modules Access Enable Register (IBMAE) 248
7.12.4.6 I-Bus Control Register (IBCTL) 248
7.12.5 EC2I Programming Guide 249
7.13 External Timer and External Watchdog (ETWD) 251
7.13.1 Overview 251
7.13.2 Features 251
7.13.3 Functional Description 251
7.13.3.1 External Timer Operation 251
7.13.3.2 External WDT Operation 252
7.13.4 EC Interface Registers 252
7.13.4.1 External Timer/WDT Configuration Register (ETWCFG) 253
7.13.4.2 External Timer Prescaler Register (ETPSR) 253
7.13.4.3 External Timer Counter High Byte (ETCNTLHR) 253
7.13.4.4 External Timer Counter Low Byte (ETCNTLLR) 254
7.13.4.5 External Timer/WDT Control Register (ETWCTRL) 254
7.13.4.6 External WDT Counter High Byte (EWDCNTLHR) 254

7.13.4.7 External WDT Low Counter (EWDCNTLLR) 254
7.13.4.8 External WDT Key Register (EWDKEYR) 254
7.14 General Control (GCTRL) 255
7.14.1 Overview 255
7.14.2 Features 255
7.14.3 Functional Description 255
7.14.4 EC Interface Registers 255
7.14.4.1 Chip ID Byte 1 (ECHIPID1) 256
7.14.4.2 Chip ID Byte 2 (ECHIPID2) 256
7.14.4.3 Chip Version (ECHIPVER) 256
7.14.4.4 Identify Input Register (IDR) 256
7.14.4.5 Reset Status (RSTS) 257
7.14.4.6 Reset Control 1 (RSTC1) 258
7.14.4.7 Reset Control 2 (RSTC2) 258
7.14.4.8 Reset Control 3 (RSTC3) 258
7.14.4.9 Base Address Select (BADRSEL) 259
7.14.4.10 Wait Next Clock Rising (WNCKR) 259
7.14.4.11 Oscillator Control Register (OSCTRL) 259
7.14.4.12 Special Control 1 (SPCTRL1) 260
7.14.4.13 Reset Control Host Side (RSTCH) 260
7.15 External GPIO Controller (EGPC) 261
7.15.1 Overview 261
7.15.2 Features 261
7.15.3 Functional Description 261
7.15.4 EC Interface Registers 261
7.15.4.1 External GPIO Address Register (EADDR) 262
7.15.4.2 External GPIO Data Register (EDAT). 262
7.15.4.3 External GPIO Control Register (ECNT). 262
7.15.4.4 External GPIO Status Register (ESTS). 263
7.16 Battery-backed SRAM (BRAM) 264
7.16.1 Overview 264
7.16.2 Features 264
7.16.3 Functional Description 264
7.16.3.1 P80L 265
7.16.4 EC Interface Registers 265
7.16.4.1 SRAM Byte n Registers (SBTn, n= 0-63) 265
7.17 Consumer IR (CIR) 266
7.17.1 Overview 266
7.17.2 Features 266
7.17.3 Functional Description 266
7.17.3.1 Transmit Operation 267
7.17.3.2 Receive Operation 267
7.17.3.3 Wakeup(Power On) Controller Programming Sequence 267
7.17.4 EC Interface Registers 268
7.17.4.1 CIR Data Register (C0DR) 268
7.17.4.2 CIR Master Control Register (C0MSTCR) 269
7.17.4.3 CIR Interrupt Enable Register (C0IER) 270
7.17.4.4 CIR Interrupt Identification Register (C0IIR) 270
7.17.4.5 CIR Carrier Frequency Register (C0CFR) 271
7.17.4.6 CIR Receiver Control Register (C0RCR) 273
7.17.4.7 CIR Transmitter Control Register (C0TCR) 276
7.17.4.8 CIR Slow Clock Control Register (C0SCK) 277
7.17.4.9 CIR Baud Rate Divisor Low Byte Register (C0BDLR) 278
7.17.4.10 CIR Baud Rate Divisor High Byte Register (C0BDHR) 278
7.17.4.11 CIR Transmitter FIFO Status Register (C0TFSR) 278
7.17.4.12 CIR Receiver FIFO Status Register (C0RFSR) 279

7.17.4.13 CIR Wakeup Code Length Register (C0WCL) 279
7.17.4.14 CIR Wakeup Code Read/Write Register (C0WCR) 279
7.17.4.15 CIR Wakeup Power Control/Status Register (C0WPS) 280
7.18 Debugger (DBGR) 281
7.18.1 Overview 281
7.18.2 Features 281
7.18.3 Functional Description 281
7.18.3.1 ROM Address Match Interrupt 281
7.18.3.2 EC Memory Snoop (ECMS) 281
7.18.4 EC Interface Registers 282
7.18.4.1 Trigger 1 Address Low Byte Register (BKA1L) 282
7.18.4.2 Trigger 1 Address Middle Byte Register (BKA1M) 282
7.18.4.3 Trigger 1 Address High Byte Register (BKA1H) 282
7.18.4.4 Trigger 2 Address Low Byte Register (BKA2L) 282
7.18.4.5 Trigger 2 Address Middle Byte Register (BKA2M) 282
7.18.4.6 Trigger 2 Address High Byte Register (BKA2H) 283
7.18.4.7 Trigger 3 Address Low Byte Register (BKA3L) 283
7.18.4.8 Trigger 3 Address Middle Byte Register (BKA3M) 283
7.18.4.9 Trigger 3 Address High Byte Register (BKA3H) 283
7.19 Parallel Port (PP) 284
7.19.1 Overview 286
7.19.2 Features 286
7.19.3 Functional Description 286
7.19.3.1 KBS Connection with Parallel Port Connector 286
7.19.3.2 In-System Programming Operation 286
8. Register List 287
9. DC Characteristics 297
Applied Voltage of VSTBY, VCC, AVCC, VBAT…… 0.3V to +3.6V 297
10. AC Characteristics 299
11. Analog Device Characteristics 309
12. Package Information 311
13. Ordering Information 313
14. Top Marking Information 315

FIGURES

Figure 3-1. Host/Flash and EC/Flash Mapping (General) 6
Figure 3-2. Host/Flash and EC/Flash Mapping (Flash Size = 512k, EC Code = 64k, a specific example) 7
Figure 3-3. EC 8032 Data/Code Memory Map 9
Figure 5-1. Power State Transitions 21
Figure 5-2. Clock Tree 28
Figure 5-3. LED connection 33
Figure 6-1. Host View Register Map via Index-Data Pair 40
Figure 6-2. Program Flow Chart for PNPCFG 59
Figure 6-3. Scratch SRAM in Data Space 64
Figure 6-4. Follow Mode for Serial Flash (e.g. Fast Read Instruction) 66
Figure 6-5. Wakeup Event and Gathering Scheme 83
Figure 6-6. KBRST# Output Scheme 85
Figure 6-7. GA20 Output Scheme 86

Figure 6-8. KBC Host Interface Block Diagram 96
Figure 6-9. IRQ Control in KBC Module 97
Figure 6-10. PMC Host Interface Block Diagram 103
Figure 6-11. EC Interrupt Request for PMC 104
Figure 6-12. IRQ/SCI#/SMI# Control in PMC Compatible Mode 105
Figure 6-13. IRQ/SCI#/SMI# Control in PMC Enhanced Mode 106
Figure 6-14. Typical PMC2EX Mailbox Operation 107
Figure 7-1. Interrupt Control System Configuration 127
Figure 7-2. Interrupt Response Time 129
Figure 7-3. Timer 0/1 in Mode 0 and Mode 1 129
Figure 7-4. Timer 0/1 in Mode 2, Auto-Reload 130
Figure 7-5. Timer 0 in Mode 3 Two 8-bit Timers 130
Figure 7-6. Timer 2: Capture Mode 131
Figure 7-7. Timer 2: Auto Reload (DECN = 0) 132
Figure 7-8. Timer 2: Auto Reload Mode (DECN = 1) 133
Figure 7-9. Timer 2: Clock Out Mode 134
Figure 7-10. Watchdog Timer 134
Figure 7-11. Serial Port Block Diagram 135
Figure 7-12. Data Frame (Mode 1, 2 and 3) 136
Figure 7-13. Timer 2 in Baud Rate Generator Mode 137
Figure 7-14. INTC Simplified Digram 163
Figure 7-15. Program Flow Chart for INTC 164
Figure 7-16. WUC Simplified Digram 170
Figure 7-17. Program Flow Chart for WUC 170
Figure 7-18. GPIO Simplified Diagram 181
Figure 7-19. ADC Channels Control Diagram 206
Figure 7-20. ADC Software Calibration Flow 219
Figure 7-21. ADC Software Calibration Flow in a Special Case 220
Figure 7-22. PWM & SmartAuto Fan Block 221
Figure 7-23. PWM Clock Tree 222
Figure 7-24. CR256 PWM Block Diagram 223
Figure 7-25. CR256 Base Pulse vs. Additional Pulse 225
Figure 7-26. SmartAuto Mode 1 Fan PWM output vs. Temperature Reading 227
Figure 7-27. Program Flow Chart for PWM Channel Output 244
Figure 7-28. Program Flow Chart for SmartAuto Fan Channel Output 245
Figure 7-29. Program Flow Chart for EC2I Read 249
Figure 7-30. Program Flow Chart for EC2I Write 250
Figure 7-31. Simplified Diagram 251
Figure 7-32. BRAM Mapping Diagram 264
Figure 7-33. Simplified Diagram 266
Figure 7-34. Parallel Port Female 25-Pin Connector 286
Figure 10-1. VSTBY Power-on Reset Timing 299

Figure 10-2. Reset Timing 299
Figure 10-3. Warm Reset Timing 300
Figure 10-4. Wakeup from Doze Mode Timing 300
Figure 10-5. Wake Up from Sleep Mode Timing 301
Figure 10-6. Asynchronous External Wakeup/Interrupt Source Edge Detected Timing 301
Figure 10-7. LPC and SERIRQ Timing 301
Figure 10-8. SWUC Wake Up Timing 302
Figure 10-9. LPC/FWH Flash Cycle Timing 302
Figure 10-10. Serial Flash Cycle Timing 303
Figure 10-11. PWM Output Timing 303
Figure 10-12. PMC SMI#/SCI# Timing 304
Figure 10-13. PMC IBF/SCI# Timing 304
Figure 10-14. PS/2 Receive/Transmit Timing 305
Figure 10-15. SMBUS Timing 306
Figure 10-16. Consumer IR (CIR) Timing 307
Figure 10-17. External GPIO Controller Data Timing 308

TABLES

Table 3-1. Host/Flash Mapping 7
Table 3-2. EC/Flash Mapping 8
Table 3-3. Flash Read/Write Protection Controlled by EC Side 8
Table 3-4. Trusted ROM Range 8
Table 4-1. Pins Listed in Numeric Order (128-pin LQFP) 13
Table 4-2. Pins Listed in Alphabetical Order (128-pin LQFP) 14
Table 5-1. Pin Descriptions of LPC Bus Interface 15
Table 5-2. Pin Descriptions of External LPC/FWH Flash Interface 15
Table 5-3. Pin Descriptions of External Serial Flash Interface 16
Table 5-4. Pin Descriptions of Keyboard Matrix Scan Interface 16
Table 5-5. Pin Descriptions of SM Bus Interface 16
Table 5-6. Pin Descriptions of PS/2 Interface 16
Table 5-7. Pin Descriptions of PWM Interface 17
Table 5-8. Pin Descriptions of Wake Up Control Interface 17
Table 5-9. Pin Descriptions of UART Interface 17
Table 5-10. Pin Descriptions of CIR Interface 17
Table 5-11. Pin Descriptions of External GPIO Bus (EGPC) Interface 18
Table 5-12. Pin Descriptions of Parallel Port Interface 18
Table 5-13. Pin Descriptions of GPIO Interface 18
Table 5-14. Pin Descriptions of Hardware Strap 18
Table 5-15. Pin Descriptions of ADC Input Interface 19
Table 5-16. Pin Descriptions of DAC Output Interface 19
Table 5-17. Pin Descriptions of Clock 19

Table 5-18. Pin Descriptions of Power/Ground Signals 19
Table 5-19. Power States 21
Table 5-20. Quick Table of Power Plane for Pins 22
Table 5-21. Pin States of LPC Bus Interface 22
Table 5-22. Pin States of LPC/FWH Flash Interface 22
Table 5-23. Pin States of Keyboard Matrix Scan Interface 23
Table 5-24. Pin States of SM Bus Interface 23
Table 5-25. Pin States of PS/2 Interface 23
Table 5-26. Pin States of PWM Interface 23
Table 5-27. Pin States of Wake Up Control Interface 23
Table 5-28. Pin States of UART Interface 24
Table 5-29. Pin States of CIR Interface 24
Table 5-30. Pin States of EGPC Interface 24
Table 5-31. Pin States of GPIO Interface 24
Table 5-32. Pin States of ADC Input Interface 24
Table 5-33. Pin States of DAC Output Interface 24
Table 5-34. Pin States of Clock 24
Table 5-35. Reset Sources 26
Table 5-36. Reset Types and Applied Module 26
Table 5-37. Clock Types 27
Table 5-38. Power Saving by EC Clock Operation Mode 29
Table 5-39. Module Status in Each Power State/Clock Operation 30
Table 5-40. Pins with Pull Function 31
Table 5-41. Pins with Schmitt-Trigger Function 31
Table 5-42. Signals with Open-Drain Function 31
Table 6-1. LPC/FWH Response 36
Table 6-2. Host View Register Map, PNPCFG 38
Table 6-3. Host View Register Map, Logical Devices 38
Table 6-4. Host View Register Map via Index-Data I/O Pair, Standard Plug and Play Configuration Registers 39
Table 6-5. Interrupt Request (IRQ) Number Assignment, Logical Device IRQ via SERIRQ 39
Table 6-6. Logical Device Number (LDN) Assignments 40
Table 6-7. Host View Register Map via Index-Data I/O Pair, SWUC Logical Device 46
Table 6-8. Host View Register Map via Index-Data I/O Pair, KBC / Mouse Interface Logical Device 47
Table 6-9. Host View Register Map via Index-Data I/O Pair, KBC / Keyboard Interface Logical Device 48
Table 6-10. Host View Register Map via Index-Data I/O Pair, SMFI Interface Logical Device 50
Table 6-11. Host View Register Map via Index-Data I/O Pair, BRAMLD Logical Device 52
Table 6-12. Host View Register Map via Index-Data I/O, PM1 Logical Device 54
Table 6-13. Host View Register Map via Index-Data I/O, PM2 Logical Device 55
Table 6-14. Mapped Host Memory Address 61
Table 6-15. EC View Register Map, SMFI 67
Table 6-16. Host View Register Map, SMFI 80
Table 6-17. Host View Register Map, SWUC 86

Table 6-18. EC View Register Map, SWUC 90
Table 6-19. Host View Register Map, KBC 97
Table 6-20. EC View Register Map, KBC 99
Table 6-21. Host View Register Map, PMC 107
Table 6-22. EC View Register Map, PMC 109
Table 6-23. Host View Register Map, TMKBC 115
Table 6-24. EC View Register Map, TMKBC 120
Table 7-1. 8032 Port Usage 125
Table 7-2. System Interrupt Table 127
Table 7-3. Timer 2 Modes of Operation 133
Table 7-4. Serial Port Signals 135
Table 7-5. Selecting the Baud Rate Generator(s) 137
Table 7-6. Internal RAM Map 139
Table 7-7. EC View Register Map, INTC 155
Table 7-8. INTC Interrupt Assignments 162
Table 7-9. EC View Register Map, WUC 165
Table 7-10. WUC Input Assignments 169
Table 7-11. EC View Register Map, KB Scan 171
Table 7-12. EC View Register Map, GPIO 173
Table 7-13. GPIO Alternate Function 177
Table 7-14. EC View Register Map, ECPM 182
Table 7-15. EC View Register Map, SMBUS 192
Table 7-16. EC View Register Map, PS/2 200
Table 7-17. EC View Register Map, DAC 203
Table 7-18. EC View Register Map, ADC 209
Table 7-19. Detail Step of ADC Channel Conversion 218
Table 7-20. CR256 Waveform 224
Table 7-21. CR256 Added Additional Pulse Position 225
Table 7-22. EC View Register Map, PWM 228
Table 7-23. EC View Register Map, EC2I 247
Table 7-24. EC View Register Map, ETWD 252
Table 7-25. EC View Register Map, GCTRL 255
Table 7-26. Modulation Carrier Frequency 272
Table 7-27. Receiver Demodulation Low Frequency (HCFS = 0) 274
Table 7-28. Receiver Demodulation High Frequency (HCFS = 1) 275
Table 7-29. I2EC/D2EC Accessible Targets 281
Table 7-30. EC View Register Map, DBGR 282
Table 9-1. Power Consumption 298
Table 10-1. VSTBY Power-on Reset AC Table 299
Table 10-2. Reset AC Table 300
Table 10-3. Warm Reset AC Table 300
Table 10-4. Wakeup from Doze Mode AC Table 300

Table 10-5. Wake Up from Sleep Mode AC Table 301
Table 10-6. Asynchronous External Wakeup/Interrupt Source Edge Detected AC Table 301
Table 10-7. LPC and SERIRQ AC Table 301
Table 10-8. SWUC Wake Up AC Table 302
Table 10-9. LPC/FWH Flash Cycle AC Table 302
Table 10-10. Serial Flash Cycle AC Table 303
Table 10-11. PWM Output AC Table 303
Table 10-12. PMC SMI#/SCI# AC Table 304
Table 10-13. PMC IBF/SCI# AC Table 304
Table 10-14. PS/2 Receive/Transmit AC Table 305
Table 10-15. SMBUS AC Table 306
Table 10-16. Consumer IR (CIR) AC Table 307
Table 10-17. External GPIO Controller Interface AC Table 308
Table 11-1. ADC Characteristics 309
Table 11-2. DAC Characteristics 309

1. Features

- **8032 Embedded Controller**
  - Twin Turbo version/3-stage pipeline
  - 9.2 MHz for EC domain and 8032 internal timer
  - Dynamic frequency range for 8032 code-fetch
  - Instruction set compatible with standard 8051/2

- **LPC Bus Interface**
  - Compatible with the LPC specification v1.1
  - Supports I/O read/write
  - Supports TMKBC trusted port cycle
  - Supports Memory read/write
  - Supports FWH read/write
  - Serial IRQ

- **Flash Interface**
  - Supports external LPC/FWH flash with 32.3 MHz
  - Supports external serial flash with 32.3/64.5 MHz
  - Up to 32M bytes Flash space shared by the host and EC side (LPC/FWH flash)
  - Up to 16M bytes Flash space shared by the host and EC side (serial flash)
  - 8-bit data bus

- **SM Bus Controller**
  - SM Bus spec. 2.0
  - SM Bus host only
  - 3 SM Bus channels

- **System Wake Up Control**
  - Modem RI# wake up
  - Telephone RING# wake up
  - IRQ/SMI routing

- **EC Wake Up Control**
  - 32 external/internal wake up events

- **Interrupt Controller**
  - 32 interrupt events to EC
  - Fixed priority

- **Timer / Watch Dog Timer**
  - 3 16-bit multi-function timers inside 8032, which is based on EC clock
  - 1 watch dog timer inside 8032, which is based on EC clock
  - 1 external timer in ETWD module, which is based on 32.768 k clock source
  - 1 external WDT in ETWD module, which is based on 32.768 k clock source

- **UART**
  - Full duplex UART

- **ACPI Power Management Channel**
  - 2 Power Management channels
  - Compatible and enhanced mode

- **Battery-backed SRAM**
  - Supports 64-byte battery-backed memory space
  - Supports power-switch circuit

- **GPIO**
  - Supports 71-port GPIO with LPC/FWH flash
  - Supports 73-port GPIO with serial flash
  - Programmable pull up/pull down
  - Schmitt trigger for input

- **External GPIO Controller (EGPC)**
  - Communicate with 4 IT8301 chips
  - Each IT8301 supports 38 GPIO ports

- **KBC Interface**
  - 8042 style KBC interface
  - Legacy IRQ1 and IRQ12
  - Fast A20G and KB reset

- **ADC**
  - 12 ADC channels (8 external)
  - 10-bit resolution (+/- 4LSB)
  - Digital filter for noise reduction

- **DAC**
  - 6 DAC channels
  - 8-bit DAC

- **PWM with SmartAuto Fan Control**
  - 8 PWM channels
  - SmartAuto Fan control
  - Base clock frequency is 32.768 kHz
  - 8/16-bit duty cycle resolution
  - 8/16-bit common input clock prescaler
  - 4 prescalers for 8 PWM output used for devices with different frequencies
  - 2 Tachometers for measuring fan speed
  - Complete resolution 256 PWM output supported. (CR256)”

- **PS/2 Interface**
  - 3 PS/2 interface
  - Hardware/Software mode selection

- **KB Matrix Scan**
  - Hardware keyboard scan
  - 18x8 keyboard matrix scan

- **In-System Programming**
  - ISP via parallel port interface on existing KBS connector
  - Fast flash programming with software provided by ITE

- **Consumer IR**
  - Supports 27-58 KHz, 400-500 KHz device
  - Supports remote power-on switch

- **TMKBC**
  - Supports v0.95

- **Power Consumption**
  - Standby with Sleep mode current: 100 μA

- **Package**
  - LQFP 128/QFP128

2. General Description

The IT8512 is a highly integrated embedded controller with system functions suitable for mobile system applications. The IT8512 directly interfaces to the LPC bus and provides ACPI embedded controller function, keyboard controller (KBC) and matrix scan, external flash interface for system BIOS and EC code, PWM, ADC and SmartAuto Fan control for hardware monitor, PS/2 interface for external keyboard/mouse devices, BRAM, CIR and system wake up functions for system power management. It also supports the external flash (or EPROM) to be shared by the host and EC side.

This page is intentionally left blank.

3. System Block Diagram

3.1 Block Diagram

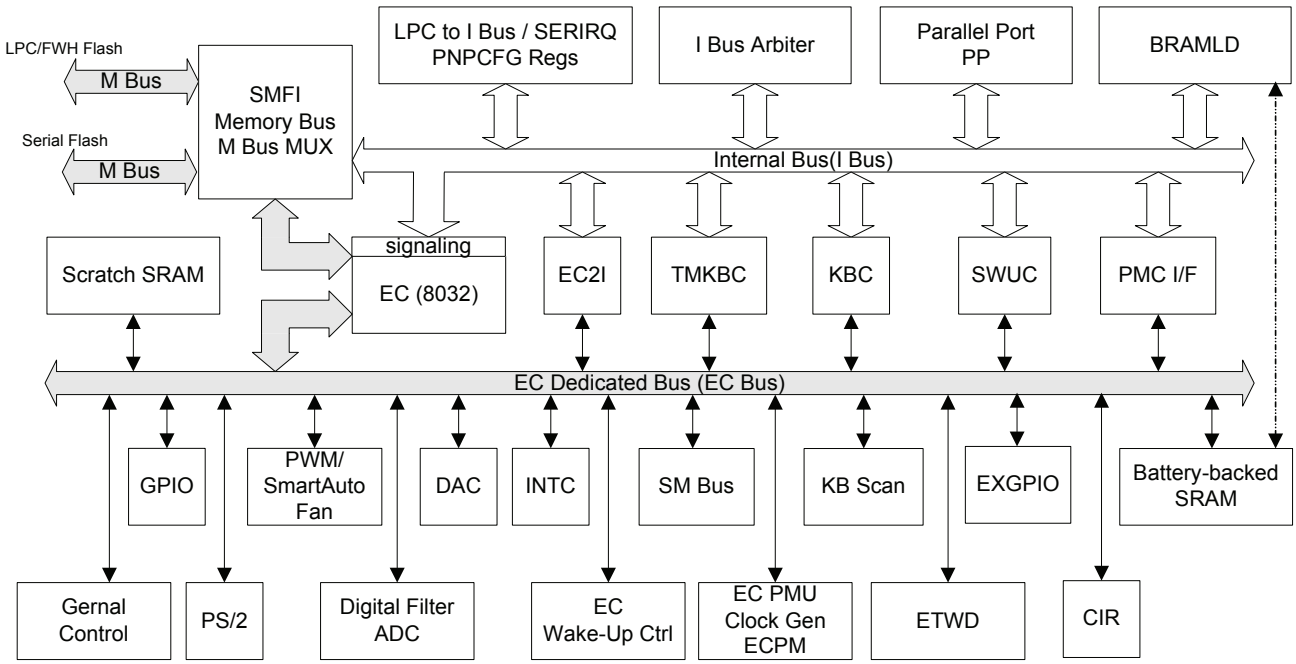

- **Host Domain:**
  LPC, PNPCFG, host parts of SMFI/SWUC/KBC/PMC/TMKBC logical devices and host parts of EC2I.
- **EC Domain:**
  EC 8032, INTC, WUC KB Scan, GPIO, ECPM, SMB, PS/2, DAC, ADC, PWM, HWS, ETWD, EC2I, BRAM, GCTRL, CIR, EGPC, DBGR, EC parts of SMFI/SWUC/KBC/PMC/TMKBC and EC parts of EC2I.

3.2 Host/EC Mapped Memory Space

Figure 3-1. Host/Flash and EC/Flash Mapping (General)

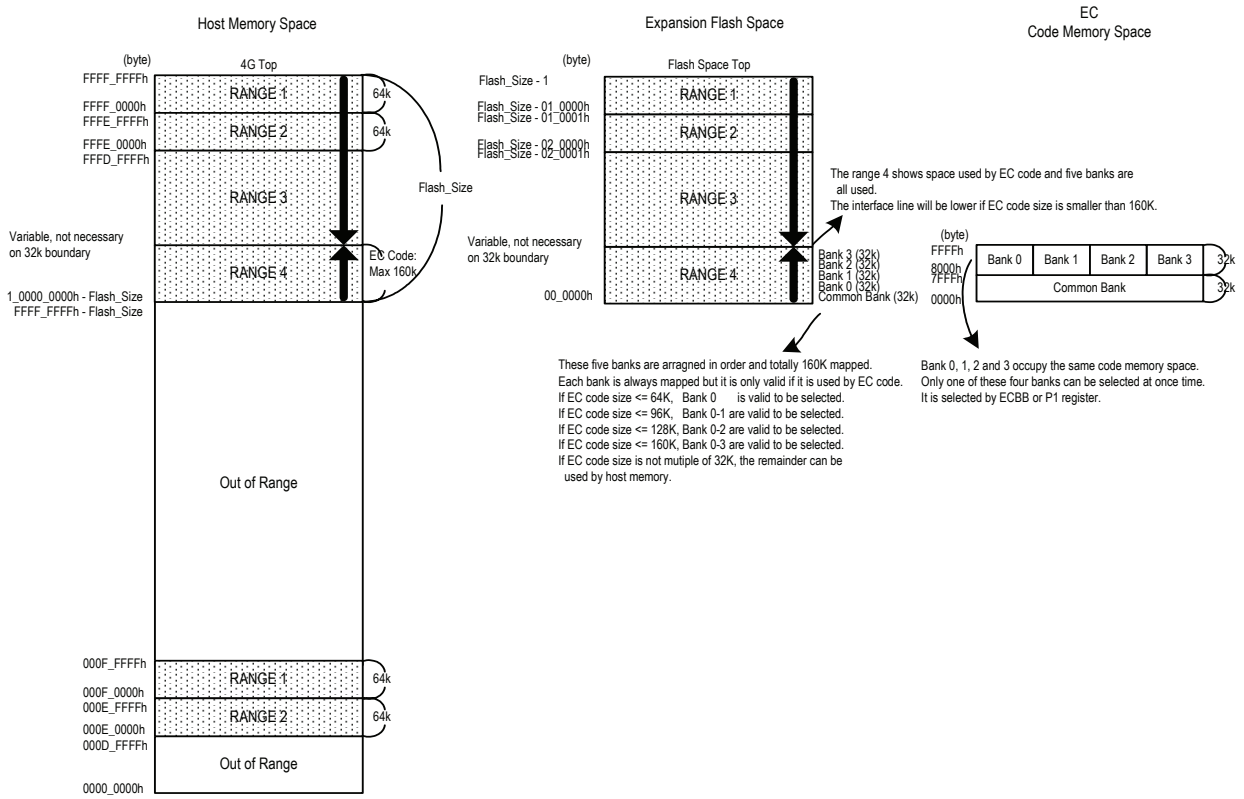

Figure 3-2. Host/Flash and EC/Flash Mapping (Flash Size = 512k, EC Code = 64k, a specific example)

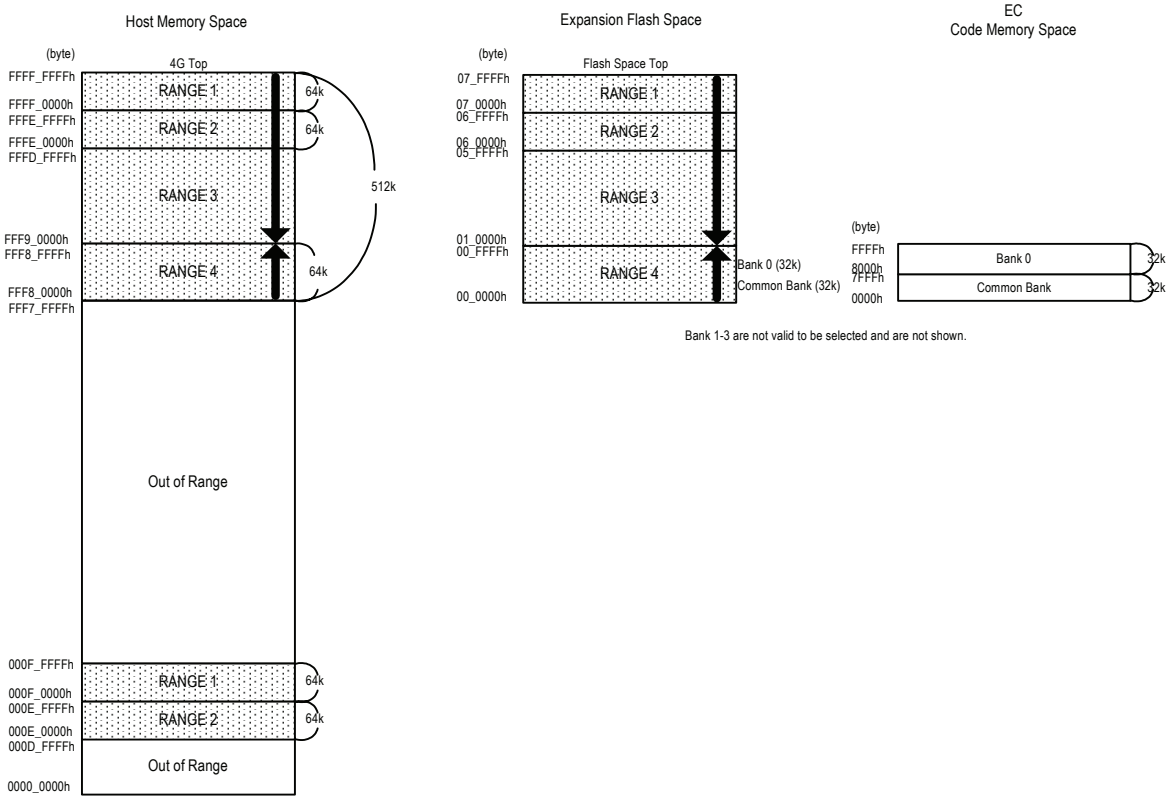

The flash memory space is shared between the host side and EC side, and it is shown in Figure 3-1. An example of 512k flash size, 64k EC code size is shown in Figure 3-2.

The host memory 4G byte top is always mapped into the top of flash space and the host processor fetches the first instruction after reset at FFFF_FFF0h in the host memory, which is 16 bytes below the uppermost flash space.

The bottom of EC code is always mapped into the bottom of flash space and EC R8032TT micro-controller fetches the first instruction after reset at 00_0000h in the EC code memory, which is 1 byte in the lowermost flash space.

The interface line of host memory and EC code is variable and not necessary on 32k boundary.

Table 3-1. Host/Flash Mapping

Host Memory Space on LPC Bus (byte)	Mapped Expansion Flash Space (byte)	Size (byte)	Mapping Condition
(1_0000_0000h–Flash_Size)~ FFFF_FFFFh	00_0000h~ (Flash_Size-1)	Flash_Size	Always
000F_0000h ~ 000F_FFFFh	(Flash_Size-01_0000h)~ (Flash_Size-1)	64k	Always
000E_0000h ~ 000E_FFFFh	(Flash_Size-02_0000h)~ (Flash_Size-01_0001h)	64k	BIOSEXTS= 1
Note: The host side can map all flash range regardless of EC code space. **Note:** All host mappings are controlled by HBREN bit in HCTRL2R register. **Note:** Flash Size is defined in FMSSR register.			

Table 3-2. EC/Flash Mapping

EC Code Memory Space (byte)	Mapped Flash Address Range (byte)	Size (byte)	Mapping Condition	Bank Selected Condition
Bank 3: 8000h ~ FFFFh	02_0000h ~ 02_7FFFh	32k	Always	ECBB=11
Bank 2: 8000h ~ FFFFh	01_8000h ~ 01_FFFFh	32k	Always	ECBB=10
Bank 1: 8000h ~ FFFFh	01_0000h ~ 01_7FFFh	32k	Always	ECBB=01
Bank 0: 8000h ~ FFFFh	00_8000h ~ 00_FFFFh	32k	Always	ECBB=00
Common Bank: 0000h ~ 7FFFh	00_0000h ~ 00_7FFFh	32k	Always	Always

Note: EC code can use the maximum 160k by banking.
Note: All EC code memory space is mapped to both EC and host side at the same time. The EC size is not necessary on 32k boundary.
Note: If BSO=1, ECBB is replaced with P1 register of 8032.
ECBB means ECBB field in FECBSR register.
BSO means BSO bit in FPCFG register.

Table 3-3. Flash Read/Write Protection Controlled by EC Side

Flash Address Range (byte)	Read Control Register Bits	Write Control Register Bits	Note
02_8000h ~ Top	ORPLA8 in SMECORPR1	ORPLA8 in SMECOWPR1	Remainder
02_0000h ~ 02_7FFFh	ORPLA7 in SMECORPR0	ORPLA7 in SMECOWPR0	32K bytes
01_8000h ~ 01_FFFFh	ORPLA6 in SMECORPR0	ORPLA6 in SMECOWPR0	32K bytes
01_0000h ~ 01_7FFFh	ORPLA5 in SMECORPR0	ORPLA5 in SMECOWPR0	32K bytes
00_8000h ~ 00_FFFFh	ORPLA4 in SMECORPR0	ORPLA4 in SMECOWPR0	32K bytes
00_6000h ~ 00_7FFFh	ORPLA3 in SMECORPR0	ORPLA3 in SMECOWPR0	8K bytes
00_4000h ~ 00_5FFFh	ORPLA2 in SMECORPR0	ORPLA2 in SMECOWPR0	8K bytes
00_2000h ~ 00_3FFFh	ORPLA1 in SMECORPR0	ORPLA1 in SMECOWPR0	8K bytes
00_0000h ~ 00_1FFFh	ORPLA0 in SMECORPR0	ORPLA0 in SMECOWPR0	8K bytes
		All ranges are write-control by HOSTWA, too.	LPC/FWH flash may has itself on-flash access control.

Table 3-4. Trusted ROM Range

Flash Address Range (byte)	Trusted ROM Range Enable	Note
02_0000h ~ 02_7FFFh	TROMRNG7 in TROMR	32K bytes
01_8000h ~ 01_FFFFh	TROMRNG6 in TROMR	32K bytes
01_0000h ~ 01_7FFFh	TROMRNG5 in TROMR	32K bytes
00_8000h ~ 00_FFFFh	TROMRNG4 in TROMR	32K bytes
00_6000h ~ 00_7FFFh	TROMRNG3 in TROMR	8K bytes
00_4000h ~ 00_5FFFh	TROMRNG2 in TROMR	8K bytes
00_2000h ~ 00_3FFFh	TROMRNG1 in TROMR	8K bytes
00_0000h ~ 00_1FFFh	Always	8K bytes
		Trusted ROM is where TMKBC firmware locates. Only Trusted ROM can access Trusted RAM, which is Scratch RAM with asserted Trust Flag (TRSF bit in SCAR0H~SCAR4H registers, respectively). TROMR register can be modified only by Trusted ROM.

3.3 EC Mapped Memory Space

Figure 3-3. EC 8032 Data/Code Memory Map

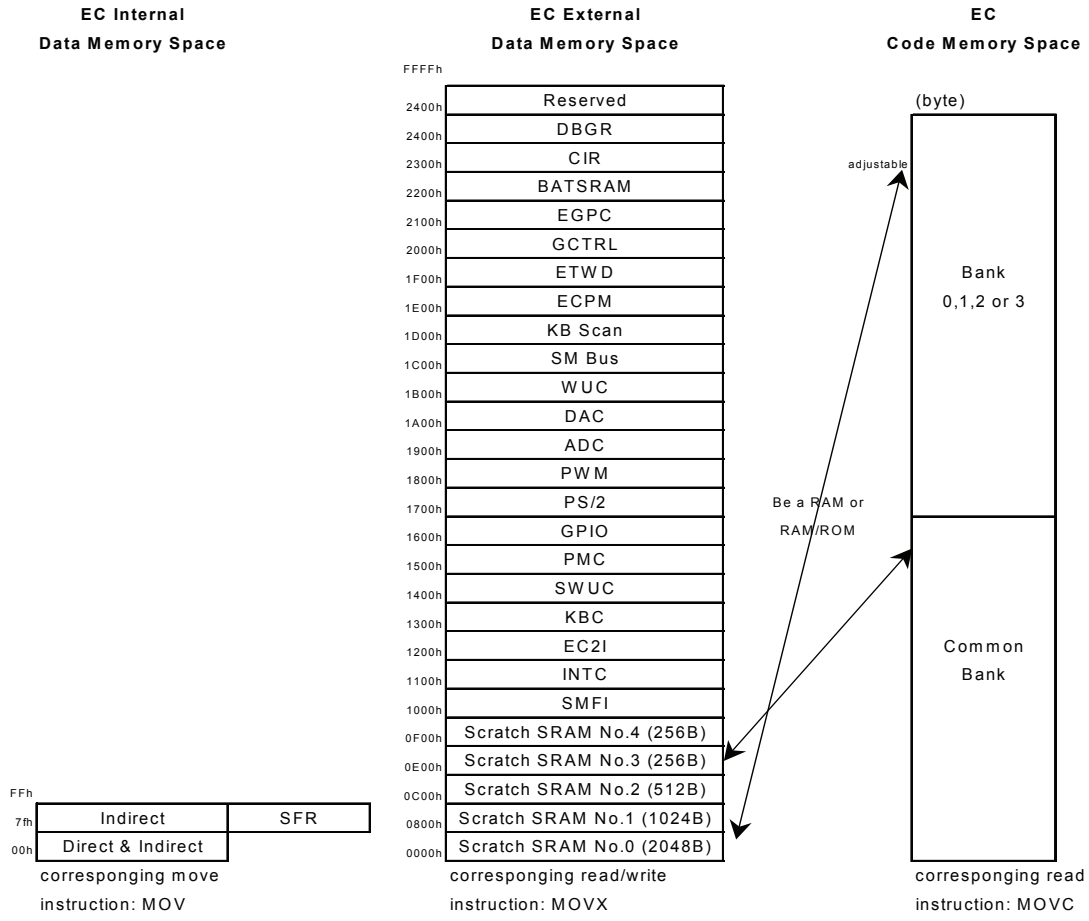

See also Figure 6-3. Scratch SRAM in Data Space on page 64.

There are five internal Scratch SRAM No 0-4, which are always mapped into data space and may be mapped into code space if their corresponding code space mapping registers are enabled. It means that Scratch SRAM may be mapped into data and code space at the same time and the firmware on Scratch ROM can access the same Scratch RAM. It is called Scratch RAM when being located at data space (default after reset) and called Scratch ROM when being located at code space.

The EC code space is 64k bytes and physically occupies the maximum 160 k bytes at the bottom of the flash space. Refer to Figure 3-1 on page 6 for the details.

3.4 Register Abbreviation

The register abbreviations and access rules are listed below:

R	**READ ONLY**. If a register is read only, writing to this register has no effect.
W	**WRITE ONLY**. If a register is write only, reading to this register returns all zero.
R/W	**READ/WRITE**. A register with this attribute can be read and written.
RC	**READ CLEAR**. If a register is read clear, reading to this register clears the register to '0'.
R/WC	**READ/WRITE CLEAR**. A register bit with this attribute can be read and written. However, writing 1 clears the corresponding bit and writing 0 has no effect.

BFNAME@REGNAME This abbreviation may be shown in figures to represent one bit in a register or one field in a register.

The used radix indicator suffixes in this specification are listed below:
Decimal number: "d" suffix or no suffix
Binary number: "b" suffix
Hexadecimal number: "h" suffix

4. Pin Configuration

4.1 Top View

IT8512E Top View

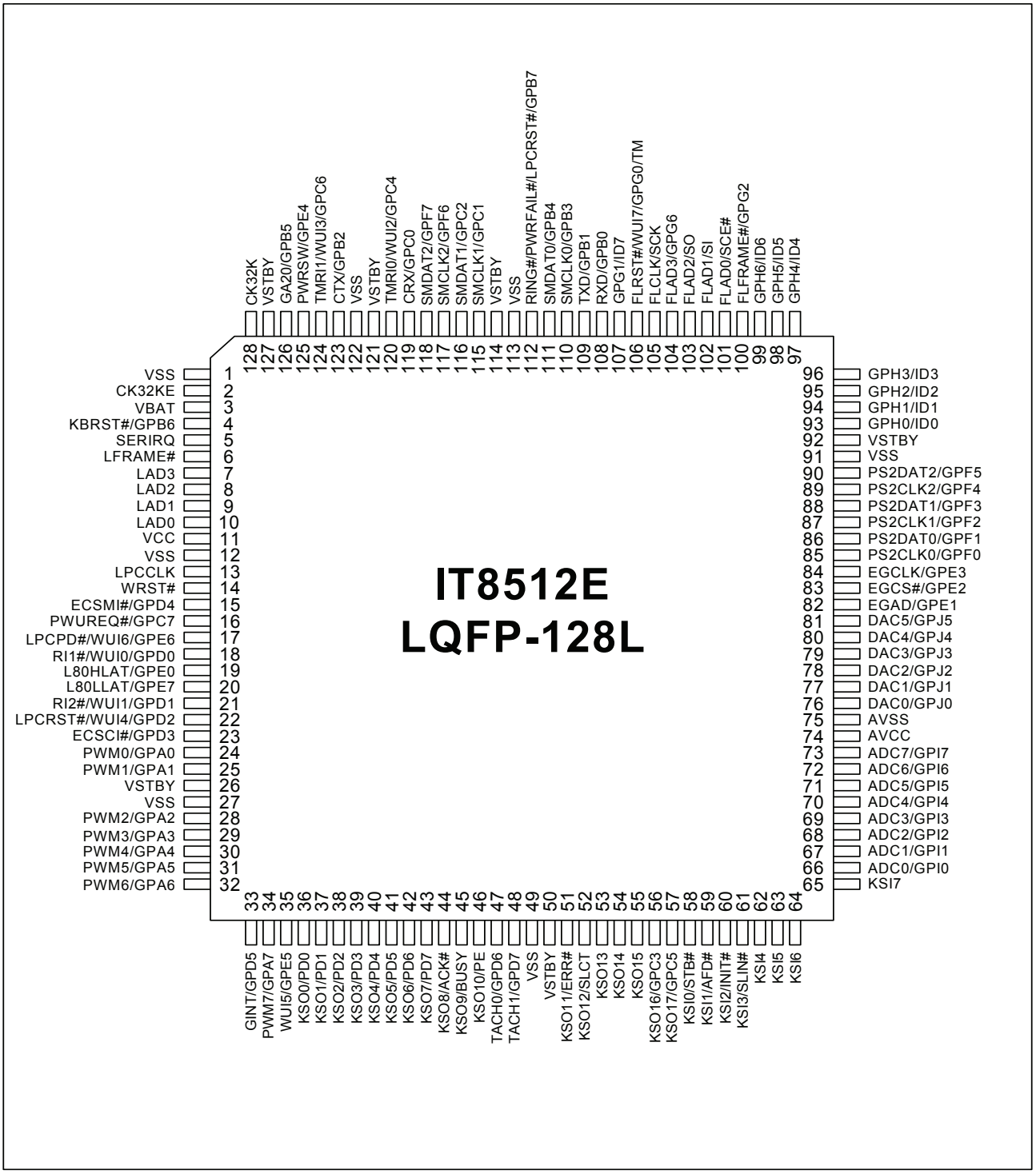

IT8512F Top View

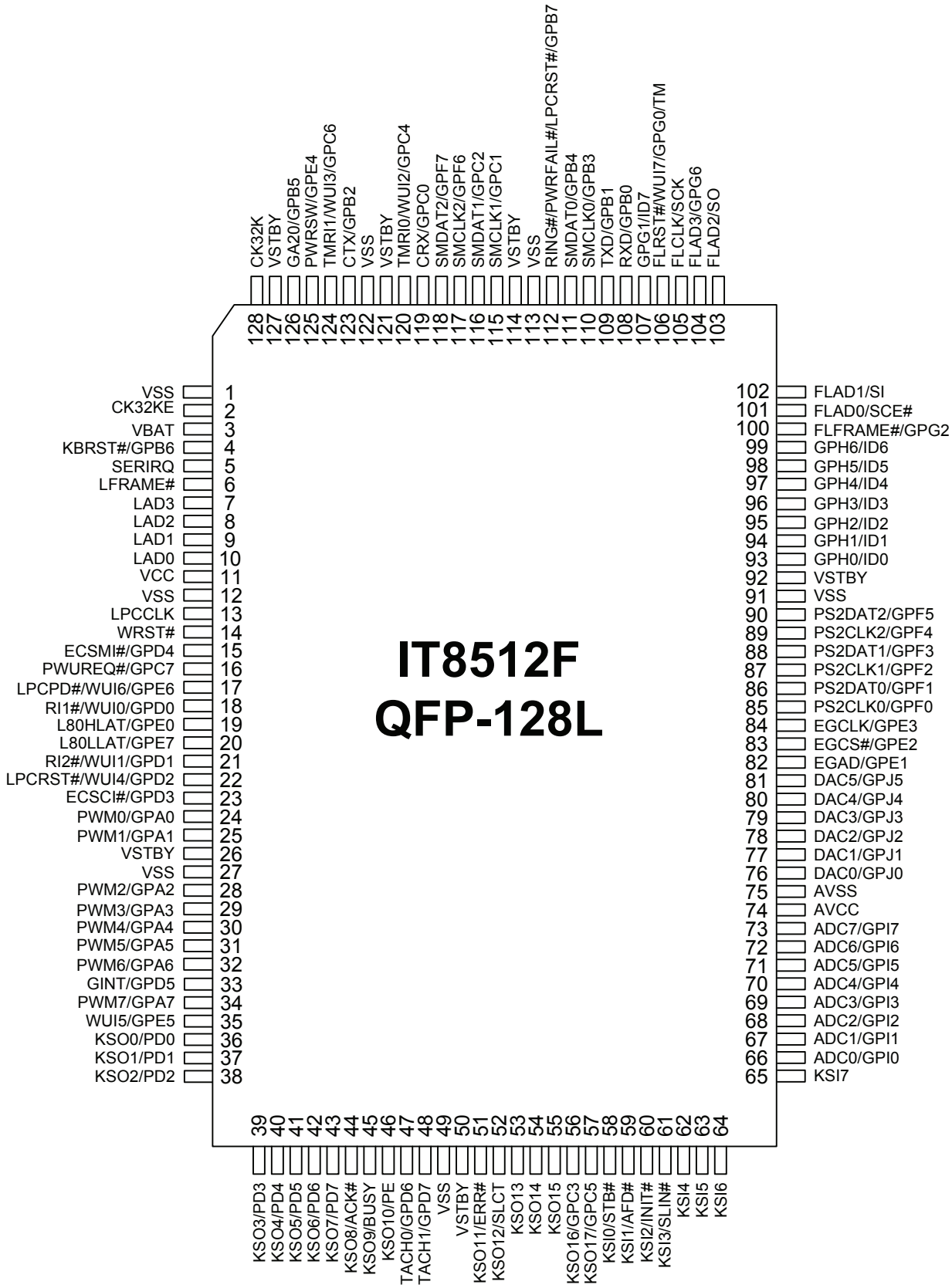

Table 4-1. Pins Listed in Numeric Order (128-pin LQFP)

Pin	Signal	Pin	Signal	Pin	Signal	Pin	Signal
1	VSS	33	GINT/GPD5	65	KSI7	97	GPH4/ID4
2	CK32KE	34	PWM7/GPA7	66	ADC0/GPI0	98	GPH5/ID5
3	VBAT	35	WUI5/GPE5	67	ADC1/GPI1	99	GPH6/ID6
4	KBRST#/GPB6	36	KSO0/PD0	68	ADC2/GPI2	100	FLFRAME#/GPG2
5	SERIRQ	37	KSO1/PD1	69	ADC3/GPI3	101	FLAD0/SCE#
6	LFRAME#	38	KSO2/PD2	70	ADC4/GPI4	102	FLAD1/SI
7	LAD3	39	KSO3/PD3	71	ADC5/GPI5	103	FLAD2/SO
8	LAD2	40	KSO4/PD4	72	ADC6/GPI6	104	FLAD3/GPG6
9	LAD1	41	KSO5/PD5	73	ADC7/GPI7	105	FLCLK
10	LAD0	42	KSO6/PD6	74	AVCC	106	FLRST#/WUI7/GPG0/TM
11	VCC	43	KSO7/PD7	75	AVSS	107	GPG1/ID7
12	VSS	44	KSO8/ACK#	76	DAC0/GPJ0	108	RXD/GPB0
13	LPCCLK	45	KSO9/BUSY	77	DAC1/GPJ1	109	TXD/GPB1
14	WRST#	46	KSO10/PE	78	DAC2/GPJ2	110	SMCLK0/GPB3
15	ECSMI#/GPD4	47	TACH0/GPD6	79	DAC3/GPJ3	111	SMDAT0/GPB4
16	PWUREQ#/GPC7	48	TACH1/GPD7	80	DAC4/GPJ4	112	RING#/PWRFAIL#/LPCRST#/GPB7
17	LPCPD#/WUI6/GPE6	49	VSS	81	DAC5/GPJ5	113	VSS
18	RI1#/WUI0/GPD0	50	VSTBY	82	EGAD/GPE1	114	VSTBY
19	L80HLAT/GPE0	51	KSO11/ERR#	83	EGCS#/GPE2	115	SMCLK1/GPC1
20	L80LLAT/GPE7	52	KSO12/SLCT	84	EGCLK/GPE3	116	SMDAT1/GPC2
21	RI2#/WUI1/GPD1	53	KSO13	85	PS2CLK0/GPF0	117	SMCLK2/GPF6
22	LPCRST#/WUI4/GPD2	54	KSO14	86	PS2DAT0/GPF1	118	SMDAT2/GPF7
23	ECSCI#/GPD3	55	KSO15	87	PS2CLK1/GPF2	119	CRX/GPC0
24	PWM0/GPA0	56	KSO16/GPC3	88	PS2DAT1/GPF3	120	TMRI0/WUI2/GPC4
25	PWM1/GPA1	57	KSO17/GPC5	89	PS2CLK2/GPF4	121	VSTBY
26	VSTBY	58	KSI0/STB#	90	PS2DAT2/GPF5	122	VSS
27	VSS	59	KSI1/AFD#	91	VSS	123	CTX/GPB2
28	PWM2/GPA2	60	KSI2/INIT#	92	VSTBY	124	TMRI1/WUI3/GPC6
29	PWM3/GPA3	61	KSI3/SLIN#	93	GPH0/ID0	125	PWRSW/GPE4
30	PWM4/GPA4	62	KSI4	94	GPH1/ID1	126	GA20/GPB5
31	PWM5/GPA5	63	KSI5	95	GPH2/ID2	127	VSTBY
32	PWM6/GPA6	64	KSI6	96	GPH3/ID3	128	CK32K

Table 4-2. Pins Listed in Alphabetical Order (128-pin LQFP)

Signal	Pin	Signal	Pin	Signal	Pin	Signal	Pin
ADC0/GPI0	66	GA20/GPB5	126	KSO5/PD5	41	RI2#/WUI1/GPD1	21
ADC1/GPI1	67	GINT/GPD5	33	KSO6/PD6	42	RING#/PWRFAIL#/ LPCRST#/GPB7	112
ADC2/GPI2	68	GPG1/ID7	107	KSO7/PD7	43	RXD/GPB0	108
ADC3/GPI3	69	GPH0/ID0	93	KSO8/ACK#	44	SERIRQ	5
ADC4/GPI4	70	GPH1/ID1	94	KSO9/BUSY	45	SMCLK0/GPB3	110
ADC5/GPI5	71	GPH2/ID2	95	L80HLAT/GPE0	19	SMCLK1/GPC1	115
ADC6/GPI6	72	GPH3/ID3	96	L80LLAT/GPE7	20	SMCLK2/GPF6	117
ADC7/GPI7	73	GPH4/ID4	97	LAD0	10	SMDAT0/GPB4	111
AVCC	74	GPH5/ID5	98	LAD1	9	SMDAT1/GPC2	116
AVSS	75	GPH6/ID6	99	LAD2	8	SMDAT2/GPF7	118
CK32K	128	KBRST#/GPB6	4	LAD3	7	TACH0/GPD6	47
CK32KE	2	KSI0/STB#	58	LFRAME#	6	TACH1/GPD7	48
CRX/GPC0	119	KSI1/AFD#	59	LPCCLK	13	TMRI0/WUI2/GPC4	120
CTX/GPB2	123	KSI2/INIT#	60	LPCPD#/WUI6/GPE6	17	TMRI1/WUI3/GPC6	124
DAC0/GPJ0	76	KSI3/SLIN#	61	LPCRST#/WUI4/GPD2	22	TXD/GPB1	109
DAC1/GPJ1	77	KSI4	62	PS2CLK0/GPF0	85	VBAT	3
DAC2/GPJ2	78	KSI5	63	PS2CLK1/GPF2	87	VCC	11
DAC3/GPJ3	79	KSI6	64	PS2CLK2/GPF4	89	VSS	1
DAC4/GPJ4	80	KSI7	65	PS2DAT0/GPF1	86	VSS	113
DAC5/GPJ5	81	KSO0/PD0	36	PS2DAT1/GPF3	88	VSS	12
ECSCI#/GPD3	23	KSO1/PD1	37	PS2DAT2/GPF5	90	VSS	122
ECSMI#/GPD4	15	KSO10/PE	46	PWM0/GPA0	24	VSS	27
EGAD/GPE1	82	KSO11/ERR#	51	PWM1/GPA1	25	VSS	49
EGCLK/GPE3	84	KSO12/SLCT	52	PWM2/GPA2	28	VSS	91
EGCS#/GPE2	83	KSO13	53	PWM3/GPA3	29	VSTBY	114
FLAD0/SCE#	101	KSO14	54	PWM4/GPA4	30	VSTBY	121
FLAD1/SI	102	KSO15	55	PWM5/GPA5	31	VSTBY	127
FLAD2/SO	103	KSO16/GPC3	56	PWM6/GPA6	32	VSTBY	26
FLAD3/GPG6	104	KSO17/GPC5	57	PWM7/GPA7	34	VSTBY	50
FLCLK/SCK	105	KSO2/PD2	38	PWRSW/GPE4	125	VSTBY	92
FLFRAME#/GPG2	100	KSO3/PD3	39	PWUREQ#/GPC7	16	WRST#	14
FLRST#/WUI7/GPG 0/TM	106	KSO4/PD4	40	RI1#/WUI0/GPD0	18	WUI5/GPE5	35

5. Pin Descriptions

5.1 Pin Descriptions

Table 5-1. Pin Descriptions of LPC Bus Interface

Pin(s) No.	Signal	Attribute	Description
LPC Bus Interface (3.3V CMOS I/F, 5V tolerant)			
22	**LPCRST#**	IK	***LPC Hardware Reset*** LPC hardware reset will reset LPC interface and host side modules. The source is determined by EC side register bit LPCRSTEN. This pin can be omitted if external LPC reset is not required.
13	**LPCCLK**	PI	***LPC Clock*** 33 MHz clock for LPC domain functions.
7-10	**LAD[3:0]**	PIO	***LPC Address Data***
6	**LFRAME#**	PI	***LPC LFRAME# Signal***
17	**LPCPD#**	IO2	***LPC LPCPD# Signal***
5	**SERIRQ**	PIO	***SERIRQ Signal***
15	**ECSMI#**	O8	***EC SMI# Signal*** This is SMI# signal driven by SWUC module.
23	**ECSCI#**	O8	***EC SCI# Signal*** This is SCI# signal driven by PMC module.
126	**GA20**	IO2	***Gate A20 Signal*** This is GA20 signal driven by SWUC module.
4	**KBRST#**	IO2	***KB Reset Signal*** This is KBRST# signal driven by SWUC module.
14	**WRST#**	IK	***Warm Reset*** For EC domain function reset after power up. WRST# is not 5V tolerant.
16	**PWUREQ#**	O2	***System Power On Request*** This is PWUREQ# signal driven by SWUC module.
19	**LPC80HLAT**	O4	***LPC I/O Port 80, High-nibble LAD Latch*** An active high signal to latch Port 80 high-nibble for the debug purpose.
20	**LPC80LLAT**	O4	***LPC I/O Port 80, Low-nibble LAD Latch*** An active high signal to latch Port 80 low-nibble for the debug purpose.

Table 5-2. Pin Descriptions of External LPC/FWH Flash Interface

Pin(s) No.	Signal	Attribute	Description
External LPC/FWH Flash Interface (3.3V CMOS I/F, 5V tolerant)			
106	**FLRST#**	O4	***LPC Flash Reset*** Reset external LPC/FWH flash. This pin should be connected to the flash.
105	**FLCLK**	O4	***LPC Flash Clock*** Clock (frequency = FreqPLL) to external LPC/FWH flash. (FreqPLL is listed in Table 10-1 on page 299)
104-101	**FLAD[3:0]**	IO4	***LPC Flash Address Data*** Four pull-up resisters are not required on this bus to reduce power consumption.
100	**FLFRAME#**	O4	***LPC Flash LFRAME# Signal*** Place a pull-up resister on this pin to enable LPC/FWH flash interface. Refer to hardware strap LF.

Table 5-3. Pin Descriptions of External Serial Flash Interface

Pin(s) No.	Signal	Attribute	Description
External Serial Flash Interface (3.3V CMOS I/F, 5V tolerant)			
105	**SCK**	O4	***Serial Flash Clock*** Clock (frequency = FreqPLL) to external serial flash. (FreqPLL is listed in Table 10-1 on page 299)
101	**SCE#**	O4	***Serial Chip Enable*** Connected to SCE# of serial flash.
102	**SI**	O4	***Serial In*** Connected to SI of serial flash.
103	**SO**	IK	***Serial Out*** Connected to SO of serial flash. Please do not place any pull-up resistor on these four pins to reduce power consumption.

Table 5-4. Pin Descriptions of Keyboard Matrix Scan Interface

Pin(s) No.	Signal	Attribute	Description
KB Matrix Interface (3.3V CMOS I/F, 5V tolerant)			
57-51, 46-36	**KSO[17:0]**	O8	***Keyboard Scan Output*** Keyboard matrix scan output.
65-58	**KSI[7:0]**	IK	***Keyboard Scan Input*** Keyboard matrix scan input for switch based keyboard.

Table 5-5. Pin Descriptions of SM Bus Interface

Pin(s) No.	Signal	Attribute	Description
SM Bus Interface (3.3V CMOS I/F, 5V tolerant)			
117, 115, 110	**SMCLK[2:0]**	IOK2	***SM Bus CLK*** **3** SM bus interface provided. SMCLK0-**2** correspond to channel A, B and C respectively.
118, 116, 111	**SMDAT[2:0]**	IOK2	***SM Bus Data*** **3** SM bus interface provided. SMDAT0-**2** correspond to channel A, B and C respectively.

Table 5-6. Pin Descriptions of PS/2 Interface

Pin(s) No.	Signal	Attribute	Description
PS/2 Interface (3.3V CMOS I/F, 5V tolerant)			
89, 87, 85	**PS2CLK[2:0]**	IOK8	***PS/2 CLK*** **3** sets of PS/2 interface, alternate function of GPIO. PS2CLK0-**2** correspond to channel 1-**3** respectively.
90, 88, 86	**PS2DAT[2:0]**	IOK8	***PS/2 Data*** **3** sets of PS/2 interface, alternate function of GPIO. PS2DAT0-**2** correspond to channel 1-**3** respectively.

Table 5-7. Pin Descriptions of PWM Interface

Signal	Pin(s) No.	Attribute	Description
PWM Interface (3.3V CMOS I/F, 5V tolerant)			
34, 32-28, 25-24	**PWM[7:0]**	IOK8	***Pulse Width Modulation Output*** Two of the eight PWM outputs can be selected as SmartAuto Fan control if enabled. Others are general-purpose PWM signals. PWM0-7 correspond to channel 0-7 respectively.
48-47	**TACH[1:0]**	IOK2	***Tachometer Input*** TACH[1:0] are tachometer inputs from external fans. They are used for measuring the external fan speed.
124, 120	**TMRI[1:0]**	IOK2	***Counter Input*** TMRI[1:0] are timer/counter input signals connected to timer2 and timer1 of 8032. Notice that the frequency must be slower than 8032 clock to be sampled.

Table 5-8. Pin Descriptions of Wake Up Control Interface

Pin(s) No.	Signal	Attribute	Description
Wake Up Control Interface (3.3V CMOS I/F, 5V tolerant)			
106,17, 35, 22, 124, 120, 21, 18	**WUI[7:0]**	IOK2-8	***EC Wake Up Input*** Supplied by VSTBY, used for EC wake up.
125	**PWRSW**	IOK2	***Power Switch Input*** Supplied by VSTBY, used to indicate the status of power switch.
21,18	**RI[2:1]#**	IOK4	***Ring Indicator Input*** Supplied by VSTBY, used for system wake up.
112	**RING#**	IOK2	***Telephone Line Ring Input*** Supplied by VSTBY, used for system wake up.

Table 5-9. Pin Descriptions of UART Interface

Pin(s) No.	Signal	Attribute	Description
UART Interface (3.3V CMOS I/F, 5V tolerant)			
109	**TXD**	IOK2	***UART TX Output*** UART TX Output from 8032
108	**RXD**	IOK2	***UART RX Input*** UART RX Input from 8032

Table 5-10. Pin Descriptions of CIR Interface

Pin(s) No.	Signal	Attribute	Description
CIR Interface (3.3V CMOS I/F, 5V tolerant)			
123	**CTX**	IOK2	***CIR TX Output*** Transmission data for CIR interface
119	**CRX**	IOK2	***CIR RX Input*** Receive data for CIR interface

Table 5-11. Pin Descriptions of External GPIO Bus (EGPC) Interface

Pin(s) No.	Signal	Attribute	Description
External GPIO Bus (EGPC) Interface (3.3V CMOS I/F, 5V tolerant)			
82	**EGAD**	IO8	***Address/Data*** The signal is used for the address or data of ITE specify Bus. Connected to IT8301 GPIO_DATA pin.
83	**EGCS#**	O8	***Address Chip Select*** The signal is used to identify the chip-select signal. Connected to IT8301 CYCLE_START pin.
84	**EGCLK**	O8	***Clock*** The clock frequency is EC clock frequency (listed in Table 10-1 on page 299). The signal only is running when the cycle is active. Connected to IT8301 GPIO_CLK pin.

Table 5-12. Pin Descriptions of Parallel Port Interface

Pin(s) No.	Signal	Attribute	Description
Parallel Port Interface (3.3V CMOS I/F)			
52	**SLCT**	O8	***Printer Select***
46	**PE**	O8	***Printer Paper End***
45	**BUSY**	O8	***Printer Busy***
44	**ACK#**	O8	***Printer Acknowledge***
61	**SLIN#**	IK	***Printer Select Input***
60	**INIT#**	IK	***Printer Initialize***
51	**ERR#**	O8	***Printer Error***
59	**AFD#**	IK	***Printer Auto Line Feed***
58	**STB#**	IK	***Printer Strobe***
43-36	**PD[7:0]**	O8	***Parallel Port Data[7:0]***

*: The interface can be connected to parallel port of computer through ITE-specified cable. The programmer can directly read/write flash through this interface.

Table 5-13. Pin Descriptions of GPIO Interface

Pin(s) No.	Signal	Attribute	Description
GPIO Interface (3.3V CMOS I/F, 5V tolerant)			
Refer to Pins List Table	**GPA[7:0], GPB[7:0], GPC[7:0], GPD[7:0], GPE[7:0], GPF[7:0], GPG[6,2:0], GPH[6:0], GPI[7:0], GPJ[5:0]**	IOK	***GPIO Signals*** The 86 GPIO pins are divided into 10 groups. Some GPIO pins have alternative function. Note that group I and J are not 5V tolerant. Please do not place any pull-up resistor on GPG0 and GPG6.
33	**GINT**	IK	***General Purpose Interrupt*** General Purpose Interrupt directly input to INT28 of INTC.

Table 5-14. Pin Descriptions of Hardware Strap

Pin(s) No.	Signal	Attribute	Description
Hardware Strap (3.3V CMOS I/F, 5V tolerant)			
100	**LF**	IK	***LPC/FWW Flash Select*** 1: use LPC/FWH flash 0: use serial flash This hardware strap is implemented on FLFRAME#.
106	**TM**	IK	***Trust Mode*** This indicates the chip is in trust mode.

Pin(s) No.	Signal	Attribute	Description
107, 99-93	**ID[7:0]**	IK	***Identify Input*** These hardware straps are used to identify the version for firmware usage. These input signals will be latched when the VSTBY power up. Note that these hardware straps are only available if these pins are not driven by other components on PCB.

Table 5-15. Pin Descriptions of ADC Input Interface

Pin(s) No.	Signal	Attribute	Description
ADC Interface (3.3V CMOS I/F)			
73-66	**ADC[7:0]**	AI	***ADC Input/Alternate GPIO*** These 8 ADC inputs can be used as GPIO ports (input mode only) depending on the ADC channels required.

Table 5-16. Pin Descriptions of DAC Output Interface

Pin(s) No.	Signal	Attribute	Description
DAC Interface (3.3V CMOS I/F)			
81-76	**DAC[5:0]**	AO	***DAC Output***

Table 5-17. Pin Descriptions of Clock

Pin(s) No.	Signal	Attribute	Description
Clock Interface (3.3V CMOS I/F)			
128	**CK32K**	OSCI	***32.768 kHz Crystal X1*** It is connected to internal crystal oscillator.
2	**CK32KE**	OSCIO	***32.768 kHz Crystal X2*** It is connected to internal crystal oscillator.

Table 5-18. Pin Descriptions of Power/Ground Signals

Pin(s) No.	Signal	Attribute	Description
Power Ground Signals			
1, 12, 27, 49, 91,113, 122	**VSS**	I	***Ground*** Digital ground.
11	**VCC**	I	***System Power Supply of 3.3V*** The power supply of LPC and related functions, which is main power of system.
26, 50, 92, 114, 121, 127	**VSTBY**	I	***Standby Power Supply of 3.3V*** The power supply of EC domain functions, which is standby power of system. Note that the power of PLL is sourced by pin 127 only.
3	**VBAT**	I	***Battery Power Supply of 3.3V*** The power supply for BRAM, and 32.768 kHz oscillator. Internal VBS power is supplied by VSTBY when it is valid and is supplied by VBAT when VSTBY is not supplied. If VBAT is not used, tie this pin to ground.
75	**AVSS**	I	***Analog Ground for Analog Component***
74	**AVCC**	I	***Analog VCC for Analog Component***

Notes: I/O cell types are described below:

I: Input PAD.
AI: Analog Input PAD.
IK: Schmitt Trigger Input PAD.
IKD: Schmitt Trigger Input PAD (integrated one pull-down resistor).
PIU: PCI Bus Specified Input PAD (integrated one pull-up resistor).
OSCI: Oscillator Input PAD.

AO: Analog Output PAD.
O2: 2 mA Output PAD.
O4: 4 mA Output PAD.
O6: 6 mA Output PAD.
O8: 8 mA Output PAD.
PIO: PCI Bus Specified Bidirectional PAD.
OSCIO: Oscillator Bidirectional PAD.
AIO2: 2 mA Bidirectional PAD with Analog Input PAD.
IOK2: 2 mA Bidirectional PAD with Schmitt Trigger Input PAD.
IOK4: 4 mA Bidirectional PAD with Schmitt Trigger Input PAD.
IOK6: 6 mA Bidirectional PAD with Schmitt Trigger Input PAD.
IOK8: 8 mA Bidirectional PAD with Schmitt Trigger Input PAD.

5.2 Chip Power Planes and Power States

Table 5-19. Power States

Power State	VCC pin	VSTBY/AVCC pin	VBAT pin	Internal VBS
Active	Supplied	Supplied	Supplied or Not	Switched from VSTBY
Active with Power Saving	Supplied	Supplied EC is in Idle, Doze or Sleep Mode	Supplied or Not	Switched from VSTBY
Standby	Not Supplied	Supplied	Supplied or Not	Switched from VSTBY
Standby with Power Saving	Not Supplied	Supplied EC is in Idle, Doze or Sleep Mode	Supplied or Not	Switched from VSTBY
Power Fail	Not Supplied	Not Supplied	Supplied	Switched from VBS
Battery Fail	Not Supplied	Not Supplied	Not Supplied	Not Supplied

Note:
(1) The AVCC should be derived from VSTBY.
(2) All other combinations of VCC / VSTBY / VBAT are invalid.
(3) In Power Saving mode, 8032 program counter is stopped and no instruction will be executed no matter whether EC Clock is running or not.
(4) VBS is the battery-backed power. When VSTBY is valid, VBS is supplied by VSTBY. When VSTBY is not valid, VBS is supplied by VBAT.

Figure 5-1. Power State Transitions

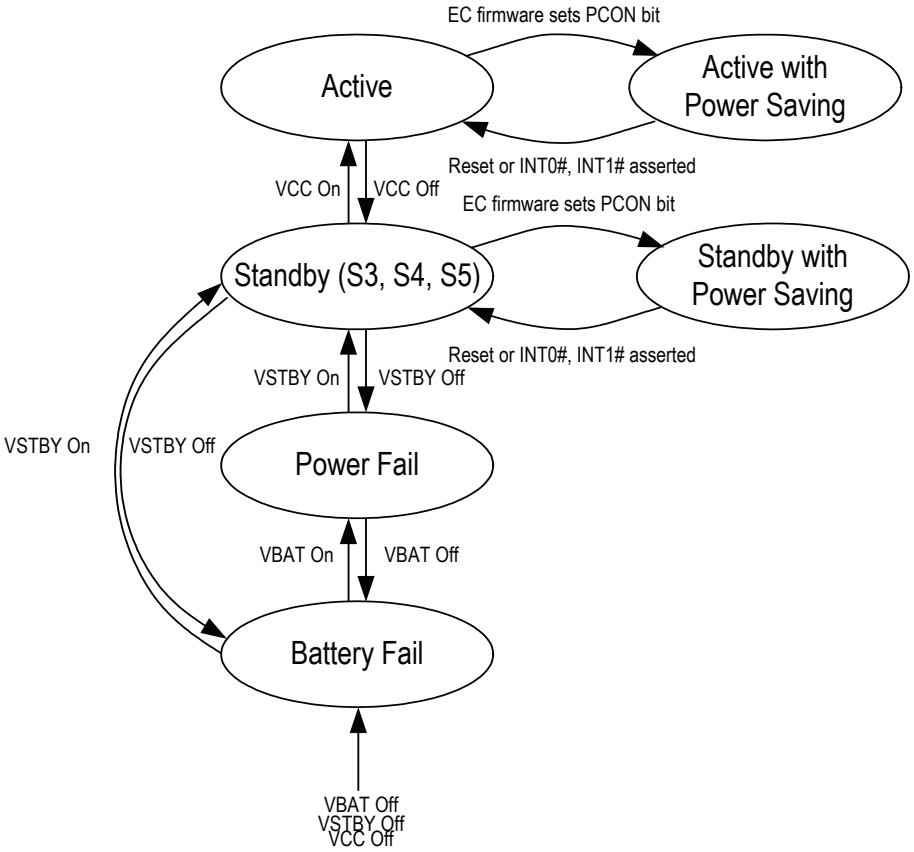

5.3 Pin Power Planes and States

Table 5-20. Quick Table of Power Plane for Pins

Power Plane	Pins No.
VCC	17-25
VSTBY	otherwise
VBS	127-128, 1-3

In the following tables of this section, Standby means that the VCC is not valid but VSTBY is supplied (S3, S4 or S5) and EC is in normal operation. Standby with Sleep means that 8032 and most of its functions are out of work due to PLL power-down while VSTBY is still supplied. Power Fail means only battery-backed power is supplied.

The abbreviations used in the following tables are described below:
H means EC drives high or driven high.
L means EC drives low or driven to low or output pin power off.
Z means EC tri-stated the I/O pin or output pin with enable.
RUN means that Output or I/O pins are in normal operation.
Driven means that the input pin is driven by connected chip or logic.
STOP means that the output pin keeps its logical level before the clock is stopped.
OFF means I/O pin power off.

Note that reset sources of 'Reset Finish' columns depend on Reset Types and Applied Module Table and it means the reset is finished when its corresponding power plane is supplied.
Note that GPIO pins listed in different functional tables except GPIO table indicate their pin status of the corresponding alternative function.

Table 5-21. Pin States of LPC Bus Interface

Signal (Alt Func of GPIO ?)	Power Plane	Reset Finish	Standby	Standby with Sleep	Power Fail
LPCRST# (Y)	VSTBY	Driven	L	L	L
LPCCLK	VCC	Driven	L	L	L
LAD[3:0]	VCC	RUN	OFF	OFF	OFF
LFRAME#	VCC	Driven	L	L	L
SERIRQ	VCC	Z	OFF	OFF	OFF
LPCPD# (Y)	VSTBY	Driven	L	L	L
ECSMI#	VSTBY	RUN	RUN	Z	OFF
ECSCI# (Y)	VSTBY	Driven	RUN	Z	OFF
GA20 (Y)	VSTBY	Driven	RUN	STOP	OFF
KBRST# (Y)	VSTBY	H	RUN	STOP	OFF
WRST#	VSTBY	Driven	Driven	Driven	L
PWUREQ#	VSTBY	Z	RUN	STOP	OFF
LPC80HL (Y)	VSTBY	Driven	L	L	OFF
LPC80LL (Y)	VSTBY	Driven	L	L	OFF

Table 5-22. Pin States of LPC/FWH Flash Interface

Signal (Alt Func of GPIO ?)	Power Plane	Reset Finish	Standby	Standby with Sleep	Power Fail
FLRST# (Y)	VSTBY	H	H	L	OFF
FLCLK	VSTBY	RUN	RUN	L	OFF
FLAD[3:0]	VSTBY	H	RUN	H	OFF
FLFRAME#	VSTBY	H	RUN	H	OFF

Table 5-23. Pin States of Keyboard Matrix Scan Interface

Signal (Alt Func of GPIO ?)	Power Plane	Reset Finish	Standby	Standby with Sleep	Power Fail
KSO[17:0]	VSTBY	L	RUN	STOP	OFF
KSI[7:0]	VSTBY	Driven	Driven	Driven	L

Table 5-24. Pin States of SM Bus Interface

Signal (Alt Func of GPIO ?)	Power Plane	Reset Finish	Standby	Standby with Sleep	Power Fail
SMCLK0 (Y) SMCLK1 (Y) SMCLK2 (Y)	VSTBY	Driven	RUN	Z	OFF
SMDAT0 (Y) SMDAT1 (Y) SMDAT2 (Y)	VSTBY	Driven	RUN	Z	OFF

Table 5-25. Pin States of PS/2 Interface

Signal (Alt Func of GPIO ?)	Power Plane	Reset Finish	Standby	Standby with Sleep	Power Fail
PS2CLK0 (Y) PS2CLK1 (Y) PS2CLK2 (Y)	VSTBY	Driven	RUN	Z	OFF
PS2DAT0 (Y) PS2DAT1 (Y) PS2DAT2 (Y)	VSTBY	Driven	RUN	Z	OFF

Table 5-26. Pin States of PWM Interface

Signal (Alt Func of GPIO ?)	Power Plane	Reset Finish	Standby	Standby with Sleep	Power Fail
PWM0 (Y) PWM1 (Y) PWM2 (Y) PWM3 (Y) PWM4 (Y) PWM5 (Y) PWM6 (Y) PWM7 (Y)	VSTBY	Driven	RUN	STOP	OFF
TACH0 (Y) TACH1 (Y)	VSTBY	Driven	Driven	Driven	OFF
TMRI0 (Y) TMRI1 (Y)	VSTBY	Driven	Driven	Driven	OFF

Table 5-27. Pin States of Wake Up Control Interface

Signal (Alt Func of GPIO ?)	Power Plane	Reset Finish	Standby	Standby with Sleep	Power Fail
WUI0 (Y) WUI1 (Y) WUI2 (Y) WUI3 (Y) WUI4 (Y) WUI5 (Y) WUI6 (Y) WUI7 (Y)	VSTBY	Driven	Driven	Driven	OFF
PWRSW (Y)	VSTBY	Driven	Driven	Driven	OFF
RI1# (Y) RI2# (Y)	VSTBY	Driven	Driven	Driven	OFF
RING# (Y)	VSTBY	Driven	Driven	Driven	OFF
PWRFAIL# (Y)	VSTBY	Driven	Driven	Driven	OFF

Table 5-28. Pin States of UART Interface

Signal (Alt Func of GPIO ?)	Power Plane	Reset Finish	Standby	Standby with Sleep	Power Fail
RXD (Y)	VSTBY	Driven	Driven	Driven	OFF
TXD (Y)	VSTBY	Driven	RUN	STOP	OFF

Table 5-29. Pin States of CIR Interface

Signal (Alt Func of GPIO ?)	Power Plane	Reset Finish	Standby	Standby with Sleep	Power Fail
CRX (Y)	VSTBY	Driven	Driven	Driven	OFF
CTX (Y)	VSTBY	Driven	RUN	STOP	OFF

Table 5-30. Pin States of EGPC Interface

Signal (Alt Func of GPIO ?)	Power Plane	Reset Finish	Standby	Standby with Sleep	Power Fail
EGAD (Y)	VSTBY	Driven	RUN	STOP	OFF
EGCS# (Y)	VSTBY	Driven	RUN	STOP	OFF
EGCLK (Y)	VSTBY	Driven	RUN	STOP	OFF

Table 5-31. Pin States of GPIO Interface

Signal (Alt Func of GPIO ?)	Power Plane	Reset Finish	Standby	Standby with Sleep	Power Fail
GPA0-GPJ5	VSTBY	Driven	Depends on its mode	STOP	OFF

Table 5-32. Pin States of ADC Input Interface

Signal (Alt Func of GPIO ?)	Power Plane	Reset Finish	Standby	Standby with Sleep	Power Fail
ADC[7:0] (Y)	AVCC	Driven	Driven	Driven	L

Table 5-33. Pin States of DAC Output Interface

Signal (Alt Func of GPIO ?)	Power Plane	Reset Finish	Standby	Standby with Sleep	Power Fail
DAC[5:0]	AVCC	L	RUN	RUN	OFF

Table 5-34. Pin States of Clock

Signal (Alt Func of GPIO ?)	Power Plane	Reset Finish	Standby	Standby with Sleep	Power Fail
CK32K	VBS	Driven	RUN	RUN	RUN
CK32KE	VBS	Driven	RUN	RUN	RUN

5.4 PWRFAIL# Interrupt to INTC

The firmware may use the PWRFAIL# to do some necessary response if VSTBY is being lost. Corresponded INT0# has higher priority than INT1#.

5.5 Reset Sources and Types

Table 5-35. Reset Sources

Reset Sources	Description
VBS Power-Up Reset	Activated after VBS is power up
VSTBY Power-Up Reset	Activated after VSTBY is power up and PLL is stable It takes t_{PLLS} for PLL stabling, and the external flash must be ready before VSTBY Power-Up Reset finish
VCC Power-Up Reset	Activated after VCC is power up
Warm Reset	Activated if WRST# is asserted
LPC Hardware Reset	Activated if LPCRST# is asserted
Super I/O Software Reset	Activated if SIOSWRST of PNPCFG is writing 1
Watch Dog Reset	Activated if 8032 WDT or External WDT time-out

Table 5-36. Reset Types and Applied Module

Reset Types	Sources	Applied Module
VBS Region Reset	VBS Power-Up Reset	BRAM, SWUC
Host Domain Hardware Reset	Warm Reset, VCC Power-Up Reset or LPC Hardware Reset LPC Hardware Reset may be unused See also HRSTS in RSTS register.	LPC, PNPCFG, Logical Devices and EC2I
Host Domain Software Reset	Super I/O Software Reset	PNPCFG, Logical Devices and EC2I
EC Domain Reset	Warm Reset, VSTBY Power-Up Reset or Watch Dog Reset	EC Domain

The WRST# should be driven low for at least t_{WRSTW} before going high (Refer to Table 10-3. Warm Reset AC Table on page 300)

.

If the firmware wants to assert an EC Domain Reset, start an internal of external watchdog without clearing its counter or write invalid data to EWDKEYR register (refer to EWDKEYEN and EWDKEYR registers).
If the firmware wants to determine the source of the last EC Domain Reset, use the Reset Scratch Register (RSTSCR).

5.5.1 Relative Interrupts to INTC

- Interrupt to INTC

LPCRST# may come from pin LPCRST#/WUI4/GPD2 or RING#/PWRFAIL#/LPCRST#/GPB7. Both pins have another interrupt relative alternative function. LPCRST# can be treated as an orthogonal input and LPCRST# event can be handled in the same interrupt routine of another alternative function.

5.6 Chip Power Mode and Clock Domain

Table 5-37. Clock Types

Types	Description
32.768 k Clock	32.768 KHz generated by internal oscillator
PLL Clock	Clock (frequency = FreqPLL) generated by internal PLL which feds 32.768 k PLL Clock is also the base clock of flash interface. (FreqPLL is listed in Table 10-1 on page 299)
EC Clock	It's from internal PLL and its frequency is listed in Table 10-1 on page 299
8032 Clock	The clock of internal timer/WDT is from EC Clock. Core clock: The frequency is variable. Upper-bound: (FreqPLL / 2) while fetching from internal SRAM Lower-bound: Refer to section 6.3.3.8 LPC/FWH Flash Performance Consideration and section 6.3.3.9 Serial Flash Performance Consideration on page 63. (FreqPLL is listed in Table 10-1 on page 299)
Host LPC Clock	33 MHz or slower from LPCCLK pin and applied on Host Domain. See also SLWPCI bit in MBCTRL register in the host side and SHBR bit in HCTRL2R register in EC side.

The 8032 can enter Idle/Doze/Sleep mode to reduce some power consumption. After entering the Idle mode, timers and the Watch Dog timer of 8032 still work. After entering Doze/Sleep mode, clock of 8032 is stopped and internal timers are stopped but the external timer still works. After entering Doze mode, EC domain clock is stopped and all internal timers are stopped. Also see Table 5-39 on page 30 for the details.
The way to wake up 8032 from the Idle mode is to enable internal or external interrupts, or hardware reset. The way to wake up 8032 from Doze/Sleep mode is to enable external interrupts or hardware reset. Firmware may set PLLCTRL bit before setting PD bit to enter the Sleep mode, since stopping PLL can reduce more power consumption, but it takes more time to wake up from Sleep mode due to waiting for PLL being stable. The steps to enter and exit Idle/Doze/Sleep are listed below:

(a) Set relative bits of IE register if they are cleared.
(b) Set channels of WUC which wants to wake up 8032 and disable unwanted channels.
(c) Set channels of INTC which wants to wake up 8032 and disable unwanted channels.
(d) Set PLLCTRL bit for Sleep mode, or clear it for Doze mode.
(e) Set IDL bit in PCON to enter the Idle mode, or set PD bit in PCON to enter the Doze/Sleep mode.
(f) 8032 waits for an interrupt to wake up.
(g) After an interrupt is asserted, 8032 executes the corresponding interrupt routine and return the next instruction after setting PCON.

The following figure describes the drivers and branches of the three clocks.
In this figure, clk_32kHz represents 32.768 k Clock; clk_src and its branches represent EC Clock; clk_ibus represents LPC Clock.

Figure 5-2. Clock Tree

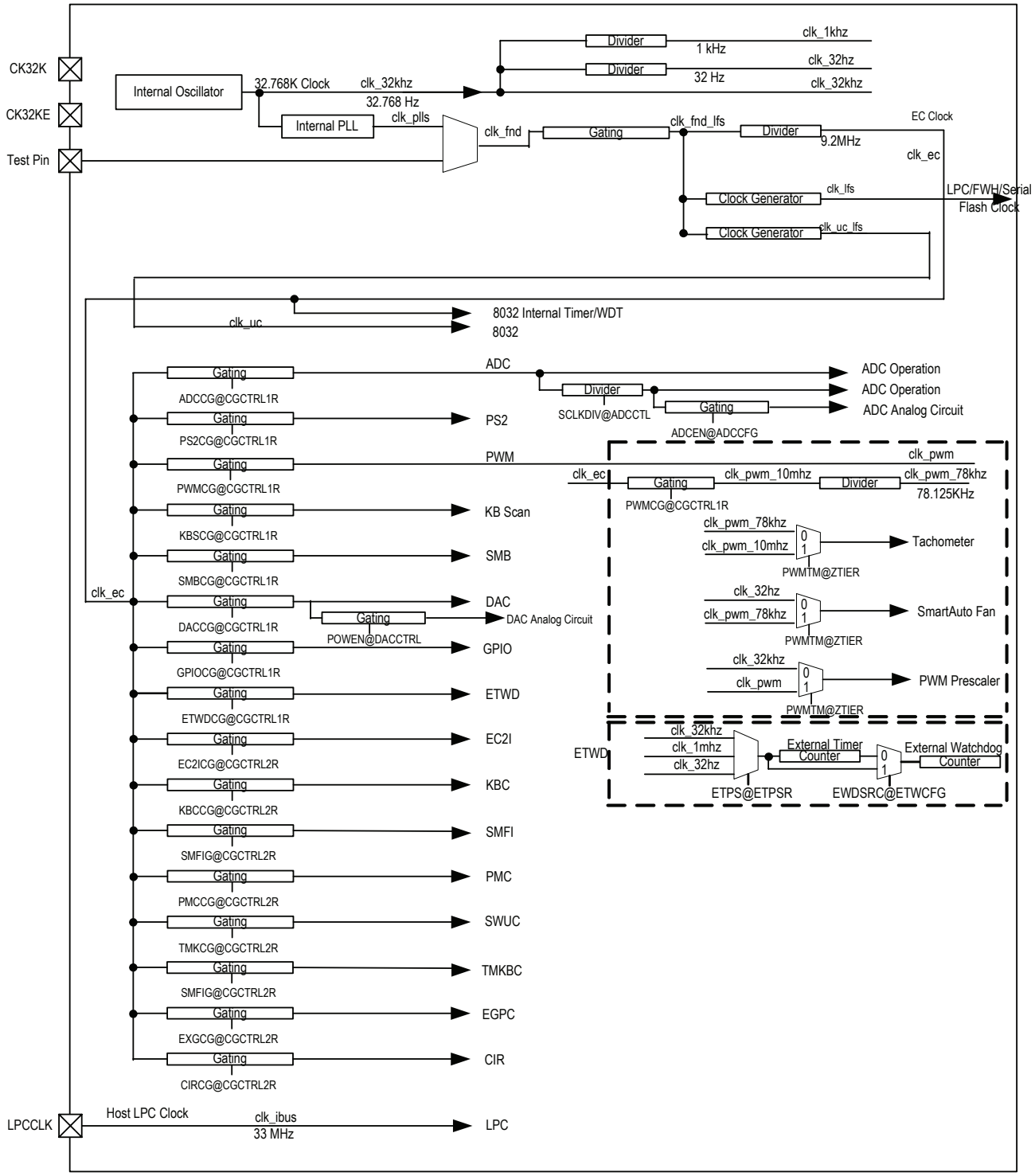

FreqPLL/FreqEC are listed in Table 10-1 on page 299.

Table 5-38. Power Saving by EC Clock Operation Mode

Mode	Item	Description
Normal	Enter	VSTBY is supplied and hardware reset done
	Exit	Enter other modes
	32.768 k Clock	On
	PLL	On
	EC Domain Clock	Driven by PLL
	8032 Clock	The same as EC Domain Clock
	Comment	Power consumption can be reduced by selectively disabling modules (refer to ECPM module)
Idle	Enter	Set IDL bit in PCON of 8032
	Exit	Interrupt from INTC, interrupt from 8032 timer, watchdog reset or hardware reset
	32.768 k Clock	On
	PLL	On
	EC Domain Clock	Driven by PLL
	8032 Clock	Core: Off Internal timer/WDT: On
	Comment	Power consumption can be reduced by selectively disabling modules (refer to ECPM module)
Doze	Enter	Set PD bit in PCON of 8032
	Exit	Interrupt from INTC or hardware reset
	32.768 k Clock	On
	PLL	On, clearing PLLCTRL of ECPM module is required
	EC Domain Clock	Driven by PLL
	8032 Clock	Off
	Comment	Power consumption can be reduced by selectively disabling modules (refer to ECPM module)
Sleep	Enter	Set PD bit in PCON of 8032
	Exit	Interrupt from INTC or hardware reset
	32.768 k Clock	On
	PLL	Off, setting PLLCTRL of ECPM module is required
	EC Domain Clock	Driven by PLL
	8032 Clock	Off
	Comment	Power consumption can be reduced by selectively disabling modules (refer to ECPM module)

Note:
The PD bit in PCON register may trigger the Doze or Sleep mode of EC Domain.

Table 5-39. Module Status in Each Power State/Clock Operation

Power State and/or Clock Operation	Running Module	Stopped Module	Off Module	Note
Active *Active with Power Saving*	LPC, PNPCFG, EC2I, host parts of SMFI/ SWUC/ KBC/ PMC/ BRAM			List host relative modules only
Standby *Standby with Power Saving*			LPC, PNPCFG, EC2I, host parts of SMFI/ SWUC/ KBC/ PMC/ BRAM	List host relative modules only
Active with Idle Mode *Standby with Idle Mode*	All other EC modules 8032 internal timer/WDT	8032 core logic except its internal timer/WDT		List EC modules only
Active with Doze Mode *Standby with Doze Mode*	All other EC modules	8032		List EC modules only
Active with Sleep Mode *Standby with Sleep Mode*	GPIO, WUC and its sources, INTC and its sources from running modules, SWUC wakeup logic, PWM channel outputs, KBS, ETWD, BRAM	All other EC modules		List all
Power Fail	BRAM		All others	List all
Battery Fail			All	List all

Note: Running module means this module works well.
Stopped module means this module is frozen because its clock is stopped.
Off module means this module is turned off due to power lost.

5.7 Pins with Pull, Schmitt-Trigger or Open-Drain Function

Table 5-40. Pins with Pull Function

Pin	Pull Function	Note
KSI[7:0]	Programmable 75k pull-up resistor	Default off
KSO[17:0]	Programmable 75k pull-up resistor	Default off
GPA0-H6 and their alternative functions	Programmable 75k pull-up/down resistor	Detail pull capability refer and default on/off refer to Table 7-13 on page 177
FLAD[3:0]	Operational 75k pull-up resistor	Pull-up the bi-directional LAD bus
ID7-0, TM, LF	Operational 75k pull-down resister	Pull down during VSTBY power on to process the hardware strap function

Note: 75k ohm is typical value. Refer to section 9 DC Characteristicson page 297 for details

Table 5-41. Pins with Schmitt-Trigger Function

Pin	Pull Function	Note
All GPIO pins except GPI0-J5 and their alternative functions	Fixed Schmitt-Trigger Input	
KSI[7:0]	Fixed Schmitt-Trigger Input	
WARMRST#	Fixed Schmitt-Trigger Input	

Table 5-42. Signals with Open-Drain Function

Signal	Open-Drain Function	Note
SERIRQ	Open-drain bi-directional signal	
KSO[17:0]	Programmable open-drain output signal	Default is push-pull
PS2CLK0, PS2DAT0 PS2CLK1, PS2DAT1 PS2CLK2, PS2DAT2	Open-drain bi-directional signal	
SMCLK0, SMDAT0 SMCLK1, SMDAT1 SMCLK2, SMDAT2	Open-drain bi-directional signal	
ECSCI#, ECSMI#, PWUREQ#	Open-drain output signal	
GPH0-H6 and their alternative functions	Programmable open-drain output signal	Default is push-pull

5.8 Power Consumption Consideration

- Each input pin should be driven or pulled

Input floating causes leakage current and should be prevented.
Pins can be pulled by an external pull resistor or internal pull for a pin with programmable pull.

- Each output-drain output pin should be pulled

If an output-drain output pin is not used and is not pulled by an external pull resistor or internal pull for a pin with programmable pull, make it drive low by the firmware.

- Each input pin which belongs to VSTBY power plane is connected or pulled up to VCC power plane

Such cases may cause leakage current when VCC is not supplied and a diode may be used to isolate leakage current from VSTBY to VCC. For example, use diodes for KBRST# and GA20 if they are connected to VCC logic of South-Bridge.

- Any pin which belongs to VSTBY power plane should not be pulled to VCC in most cases.

It may cause a leakage current path when VCC is shut down. Refer to the above consideration.

- Program GPIO ports as output mode as soon as possible

Any GPIO port used in output mode should be programmed as soon as possible since this pin may not be driven (be floating) if its default value of pull is off.

- Disable unnecessary pull in power saving mode

Prevent from driving a pin low or letting a pin be driven low but its pull high function is enabled in power saving mode.
Prevent from driving a pin high or letting a pin be driven high but its pull low function is enabled in power saving mode.

- Handle the connector if no cable is plugged into it

The firmware or the hardware should prevent the wire connected to the connector from no driving if no cable is plugged into the connector such as PS/2 mouse and so on.

- Disable unnecessary pull for a programmable pull pin

Pull control may be enabled for an input pin or an open-drain output pin and should be disabled for a push-pull output pin.
Pull control should be disabled if an external pull resistor exists.
External pull resistor can control the pull current precisely since the register value of the internal pull has large tolerance. Refer to section 9 DC Characteristicson page 297 for details.

- Flash standby mode

Make flash enter standby mode to reduce power consumption if it is not used.
It's controlled by AFSTBY bit in FPCFG register.

- Prevent accessing Scratch RAM before entering power-saving mode

There is unnecessary power consumption after Scratch RAM is accessed in data space. Read any other registers of external data memory once to prevent this condition.

- Use Doze mode rather than Idle mode

Doze mode has less power consumption than Idle mode because 8032 internal timer/WDT clock is gated (stopped) in Doze mode.
Firmware design using Idle mode should be replaced with Doze mode by replacing internal timer and watchdog by external timer and watchdog.

- Use Sleep mode rather than Doze mode

Sleep mode has less power consumption than Doze mode because PLL is power-down and EC clock is stopped in Sleep mode, although most EC modules are not available.

Refer to Table 5-39 on page 30 for the details.

- Gate clock by module in EC domain

All modules in EC domain are not clock gated in default but can be gated by module to get less power consumption.
It's controlled by CGCTRL1R and CGCTRL2R registers.

- Power-down ADC/DAC analog circuit if it is unnecessary.

ADC/DAC analog circuits are power-down in default and should be activated only if necessary.
ADC analog circuit power-down is controlled by ADCEN bit in ADCCFG register.
DAC analog circuit power-down is controlled by POWDN bit in DACCTRL register.

- Connect LED cathode to output pin

It doesn't reduce total power consumption although it reduces power consumption of IT8512.
The advantage is to reduce the temperature of IT8512 and prevent the output pad from driving large current.

Figure 5-3. LED connection

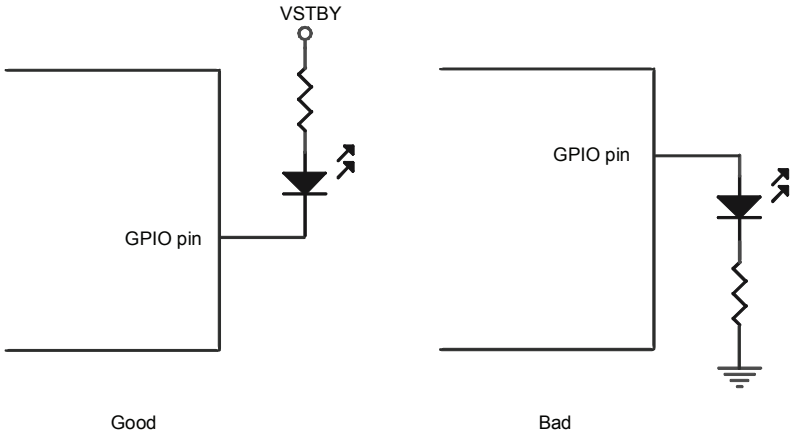

This page is intentionally left blank.

6. Host Domain Functions

6.1 Low Pin Count Interface

6.1.1 Overview

The Low Pin Count (LPC) is an interface for modern ISA-free system. It is defined in Intel's LPC Interface Specification, Revision 1.1. There are seven host-controlled modules that can be accessed by the host via the LPC interface. These host-controlled modules are "Logical Devices" defined in Plug and Play ISA Specification, Version 1.0a.

6.1.2 Features

- Complies with Intel's LPC Interface Specification, Revision 1.1
- Supports SERIRQ and complies with Serialized IRQ Support for PCI Systems, Revision 6.0
- Supports LPCPD#
- Supports Plug and Play ISA registers

6.1.3 Accepted LPC Cycle Type

The supported LPC cycle types are listed below:
* LPC I/O Read (16-bit address, 8-bit data)
* LPC I/O Write (16-bit address, 8-bit data)
* Trusted Port Read (16-bit address, 8-bit data)
* Trusted Port Write (16-bit address, 8-bit data)
* LPC Memory Read(32-bit address, 8-bit data)
* LPC Memory Write(32-bit address, 8-bit data)
* FWH Read (32-bit address, 8-bit data)
* FWH Write (32-bit address, 8-bit data)

I/O cycles are used to access PNPCFG and Logical Devices. Memory or FWH is used to access Flash content through SMFI module Host-Indirect memory cycles based on I/O cycles can also access Flash. Refer to SMFI Module for details about Host-Indirect memory access.

The following table describes how LPC module responds the I/O, Memory and FWH cycles from Host side in different conditions.

Table 6-1. LPC/FWH Response

Cycle Type/Condition		Read Response	Write Response
All Cycles before PLL Stable NOTE 4		Long-Wait	Long-Wait
I/O Cycle to PNPCFG or Logical Devices		Ready	Ready
I/O Cycle but Address Out Of Range		Cycle Ignored	Cycle Ignored
I/O Cycle to Locked PNPCFG by EC2I		Returns 00h	Cycle Ignored
Host-Indirect Memory Address NOTE 3		Ready	Ready
Memory Cycle, FWH Cycle or Host-Indirect Memory Data		Long-Waits until Ready	Long-Waits until Ready NOTE 1
Memory Cycle, FWH Cycle or	*HERES=00**	Long-Wait	Cycle Ignored
Host-Indirect Memory Data	*HERES=01*	Returns 00h	Cycle Ignored
but Address Protected by SMFI	*HERES=10*	Error-SYNC	Error-SYNC
	HERES=11	Long-Wait	Error-SYNC
Memory Cycle or Host-Indirect Memory Data but Address Out of Range		Cycle Ignored	Cycle Ignored
FWH Cycle but Address Out of Range		Ready	Ready
FWH Cycle but FWH ID is unmatched NOTE 2		Cycle Ignored	Cycle Ignored
FWH Cycle but HBREN bit in HCTRL2R register cleared		Cycle Ignored	Cycle Ignored

Note 1:
After reset, IT8512 responses Long-Waits before Ready for FWH Write Cycle.

If LPC host (South-Bridge) fails to recognize Long-Wait SYNC during FWH Write Cycle, it is recommended to use Host-Indirect Memory.

Note 2:
FWH ID is defined in FWHID field in SHMC register.

Note 3:
Host-Indirect Memory Cycles access the flash via LPC I/O Cycle. Host-Indirect Memory Address is combined with SMIMAR0, SMIMAR1, SMIMAR2 and SMIMAR3 registers. Host-Indirect Memory Data is SMIMDR register.

Note 4:
The host LPC interface is disabled in sleep mode.

6.1.4 Debug Port Function

LPC module implements two latch signals for Main-Board debug purpose. LPC I/O write cycles with address equal to 80h will cause the LPC module to assert LPC80HL and LPC80LL signals which provide a simple external logic to latch it in order to display on LED, even though I/O port 80h is not recognized by PNPCFG or any Logical Device. LPC80HL goes high when it is time to latch the high-nibble of the data written to port 80h, and LPC80LL means the low-nibble.

Port 80h data can be read via parallel port with the software provided by ITE.

6.1.5 Serialized IRQ (SERIRQ)

IT8512 has programmable IRQ number for each logical device. Available IRQ numbers are 1, 2, 3, 4 5, 6, 7, 8, 9, 10, 11, 12, 14, and 15.

Different logical devices inside IT8512 can share the same IRQ number if they have the same IRQPS bit in IRQTP register and are configured as the same triggered mode (all level-triggered or all edge triggered) in their EC side registers.

But it is not allowed to share an IRQ number with a logical device outside IT8512. Note that edge-triggered interrupts are not suitable for sharing in most cases.

6.1.6 Relative Interrupts to WUC

- Interrupt to WUC
  If the LPC address of an I/O, LPC Memory or FWH Cycle on LPC bus is accepted, WU42 interrupt will be asserted.

6.1.7 LPCPD#

- LPCPD#

LPCPD# is used as internal “power good” signal to indicate the status of VCC. It is recommend to be implemented. See also VCCDO bit in RSTS register in 7.14.4.5 on page 257.

6.1.8 Check Items

If EC fails in LPC memory or I/O cycles at boot, check the following recommended items first.

- LPC/FWH memory cycles
  Check whether corresponding GPIO ports of necessary FA21-17 are switched to their alternative function.
  Check whether LPCRST# reset source from GPD2 or GPB7 is logic low if it is in alternative function.
  Check whether LPCPD# signal from GPE6 is logic low if it is in alternative function.
  Check whether HBREN bit is enabled in HCTRL2R register.
  Check whether the firmware doesn’t change the read protection control.

- LPC I/O cycles
  Check whether LPCRST# reset source from GPD2 or GPB7 is logic low if it is in alternative function.
  Check whether LPCPD# signal from GPE6 is logic low if it is in alternative function.
  Check whether BADDR1-0 field in BADRSEL register are in correct setting.
  Check whether EC2I is not locking PNPCFG access from the host side.

6.2 Plug and Play Configuration (PNPCFG)

The host interface registers of PNPCFG (Plug and Play Configuration) are listed below. The base address can be configured via BADDR1-0 field in BADRSEL register. Note that bit 0 of SWCBALR must be zero.
To access a register of PNPCFG, write target index to address port and access this PNPCFG register via data port. If accessing the data port without writing index to address port, the latest value written to address port is used as the index. Reading the address port register returns the last value written to it.

Table 6-2. Host View Register Map, PNPCFG

	BADDR1-0 =00b	BADDR1-0 =01b	BADDR1-0 =10b	BADDR1-0 =11b
7 0	I/O Port Address			
Address Port	2Eh	4Eh	(SWCBAHR, SWCBALR)	Reserved
Data Port	2Fh	4Fh	(SWCBAHR, SWCBALR+1)	Reserved

Note 1: SWCBALR should be on boundary = 2, which means bit 0 must be 0.
Note 2: Only use BADDR1-0=10b if the port pair is not 2Eh/2Fh or 4Eh/4Fh.

The host interface registers for Logic Device Control are listed below. The base address can be configured via the following Plug and Play Configuration Registers. Note that if a logical device is activated but with base address equal to 0000h, the host side cannot access this logical device since 0000h means I/O address range is disabled.

Table 6-3. Host View Register Map, Logical Devices

7 0	I/O Port Address
System Wake-Up Control (SWUC)	Depend on PnP SW Used Addr: (IOBAD0+00h,+02h,+06h,+07h,13h,15h) Base address boundary = 32
KBC / Mouse Interface	Unused
KBC / Keyboard Interface	Depend on PnP SW Used Addr: (IOBAD0+00h), (IOBAD1+00h) Base address boundary = none, none Legacy Address = 60h,64h
Shared Memory/Flash Interface (SMFI)	Depend on PnP SW Used Addr: (IOBAD0+0h, …+8h,+0Ch) Base address boundary = 16
BRAMLD	Depend on PnP SW Used Addr: (IOBAD0+0h,+1h), (IOBAD1+0h,+1h) Base address boundary = 2, 2 Legacy Address = 70h-73h
Power Management I/F Channel 1 (PM1)	Depend on PnP SW Used Addr: (IOBAD0+0h), (IOBAD1+0h) Base address boundary = none, none Legacy Address = 62h,66h
Power Management I/F Channel 2 (PM2)	Depend on PnP SW Used Addr: (IOBAD0+0h), (IOBAD1+0h) Base address boundary = none, none Legacy Address = 68h,6Ch

Note: The boundary number means the address must be the multiple of this number.

The host interface registers for Standard Plug and Play Configuration of PNPCFG are listed below. These registers are accessed via the Index-Data I/O ports defined in Table 6-3 on page 38. Note PNPCFG registers are not allowed to be accessed if LKCFG bit in LSIOHA register of EC2I module is set. They are divided into two parts, Super I/O Configuration Registers and Logical Device Registers.

Table 6-4. Host View Register Map via Index-Data I/O Pair, Standard Plug and Play Configuration Registers

	7 0 Register Name	Index
Super I/O Configuration Registers	Logical Device Number (LDN)	07h
	Chip ID Byte 1(CHIPID1)	20h
	Chip ID Byte 2(CHIPID2)	21h
	Chip Version (CHIPVER)	22h
	Super I/O Control (SIOCTRL)	23h
	Reserved	24h
	Super I/O IRQ Configuration (SIOIRQ)	25h
	Super I/O General Purpose (SIOGP)	26h
	Reserved	27h
	Reserved	28h
	Reserved	29h
	Reserved	2Ah
	Reserved	2Bh
	Super I/O Power Mode (SIOPWR)	2Dh
	Reserved	2Eh
Logical Device Configuration Registers Selected by LDN Register	Logical Device Activate Register (LDA)	30h
	I/O Port Base Address Bits [15:8] for Descriptor 0 (IOBAD0[15:8])	60h
	I/O Port Base Address Bits [7:0] for Descriptor 0 (IOBAD0[7:0])	61h
	I/O Port Base Address Bits [15:8] for Descriptor 1 (IOBAD1[15:8])	62h
	I/O Port Base Address Bits [7:0] for Descriptor 1 (IOBAD1[7:0])	63h
	Interrupt Request Number and Wake-Up on IRQ Enable (IRQNUMX)	70h
	Interrupt Request Type Select (IRQTP)	71h
	DMA Channel Select 0 (DMAS0)	74h
	DMA Channel Select 0 (DMAS1)	75h
	Device Specific Logical Device Configuration 1 to 10	F0h-F9h

The IRQ numbers for Logic Device IRQ via LPC/SERIRQ are listed below. The IRQ numbers can be configured via the above Plug and Play Configuration Registers.

Table 6-5. Interrupt Request (IRQ) Number Assignment, Logical Device IRQ via SERIRQ

Logical Device	IRQ number
System Wake-Up Control (SWUC)	Depend on PnP SW
KBC / Mouse Interface	Depend on PnP SW, Legacy IRQ Num=12
KBC / Keyboard Interface	Depend on PnP SW, Legacy IRQ Num=01
Shared Memory/Flash Interface (SMFI)	Unused
Power Management I/F Channel 1 (PM1)	Depend on PnP SW, Legacy IRQ Num=01
Power Management I/F Channel 2 (PM2)	Depend on PnP SW, Legacy IRQ Num=01

6.2.1 Logical Device Assignment

Table 6-6. Logical Device Number (LDN) Assignments

LDN	Functional Block
04h	System Wake-Up Control (SWUC)
05h	KBC/Mouse Interface
06h	KBC/Keyboard Interface
0Fh	Shared Memory/Flash Interface (SMFI)
10h	BRAMLD
11h	Power Management I/F Channel 1 (PM1)
12h	Power Management I/F Channel 2 (PM1)

The following figure indicates the PNPCFG registers is combined with Super I/O Configuration Registers and Logical Device Configuration Registers. Logical Device Configuration Registers of a specified Logical Device is accessable only when Logical Device Number Register is filled with corresponding Logical Device Number listed in Table 6-6 on page 40 .

Figure 6-1. Host View Register Map via Index-Data Pair

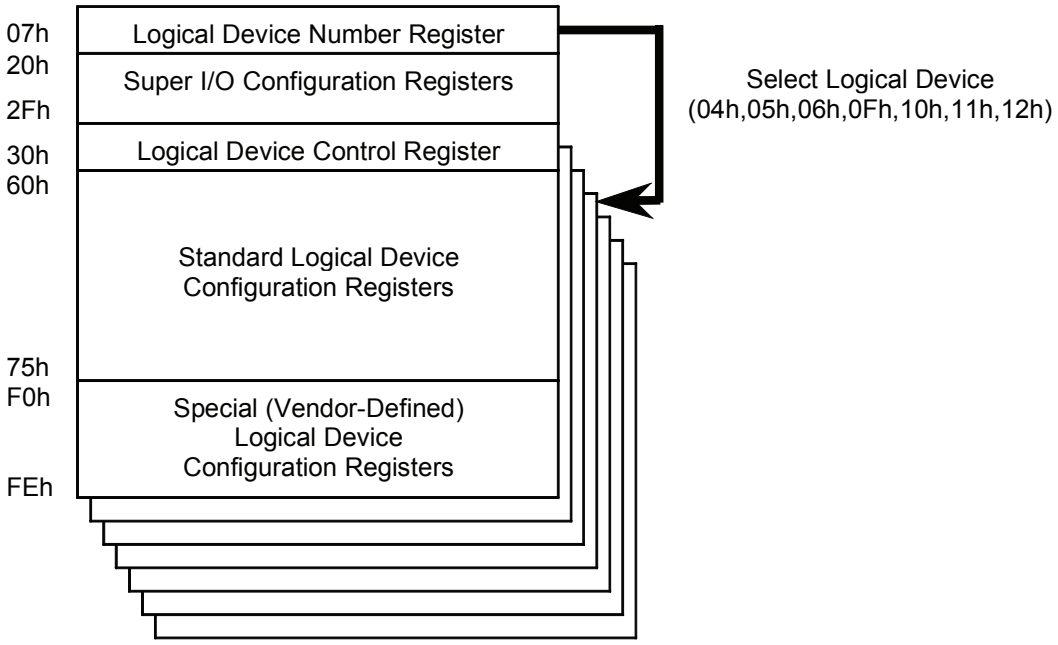

6.2.2 Super I/O Configuration Registers

Registers with index from 07h to 2Eh contain Super I/O configuration settings.

6.2.2.1 Logical Device Number (LDN)

This register contains general Super I/O configurations.

Index: 07h

Bit	R/W	Default	Description
7-0	R/W	04h	**Logical Device Number (LDN)** This register selects the current logical device. Valid values are 04h, 05h, 06h, 0Fh, 10h, 11h and 12h. All other values are reserved.

6.2.2.2 Chip ID Byte 1 (CHIPID1)

Index: 20h

Bit	R/W	Default	Description
7-0	R	85h	**Chip ID Byte 1 (CHIPID1)** This register contains the Chip ID byte 1.

6.2.2.3 Chip ID Byte 2 (CHIPID2)

Index: 21h

Bit	R/W	Default	Description
7-0	R	12h	**Chip ID Byte 2 (CHIPID2)** This register contains the Chip ID byte 2.

6.2.2.4 Chip Version (CHIPVER)

This register contains revision ID of this chip

Index: 22h

Bit	R/W	Default	Description
7-0	R	22h	**Chip Version (CHIPVER)**

6.2.2.5 Super I/O Control Register (SIOCTRL)

This register contains general Super I/O configurations.

Index: 23h

Bit	R/W	Default	Description
7-6	-	0h	**Reserved**
5-4	-	0h	**Reserved**
3-2	-	0h	**Reserved**
1	W	0b	**Software Reset (SIOSWRST)** Read always returns 0. 0: No action. 1: Software Reset the logical devices.
0	R/W	1b	**Super I/O Enable (SIOEN)** 0: All Super I/O logical devices are disabled except SWUC and SMFI. 1: Each Super I/O logical device is enabled according to its Activate register. (Index 30h)

6.2.2.6 Super I/O IRQ Configuration Register (SIOIRQ)

This register contains general Super I/O configurations.

Index: 25h

Bit	R/W	Default	Description
7-5	-	0h	**Reserved**
4	R/W	0b	**SMI# to IRQ2 Enable (SMI2IRQ2)** This bit enables using IRQ number 2 in the SERIRQ protocol as a SMI# interrupt. This bit is similar to LDACT bit in LDA register. 0: Disabled 1: Enabled
3-0	-	0h	**Reserved**

6.2.2.7 Super I/O General Purpose Register (SIOGP)

This register contains general Super I/O configurations.

Index: 26h

Bit	R/W	Default	Description
7	R/W	0b	**SIOGP Software Lock (SC6SLK)** 0: Writing to bits 0-6 of SIOGP is allowed. Other bits in this register can be cleared by Hardware and Software reset (SIOSWRST). 1: Not allowed. Bits 6-0 of this register are read-only. All bits in this register can be cleared by Hardware reset only.
6-5	R/W	00b	**General-Purpose Scratch (GPSCR)** Reading returns the value that was previously written. Note that the EC side can access whole PNPCFG registers via EC2I.
4	-	-	**Reserved**
3-0	-	0h	**Reserved**

6.2.2.8 Super I/O Power Mode Register (SIOPWR)

This register is a battery-backed register used by the EC side. See also 6.4.5.2.

Index: 2Dh

Bit	R/W	Default	Description
7-2	-	0h	**Reserved**
1	R/W	0b	**Power Supply Off (PWRSLY)** It indicates the EC side that the host requests to shut down the power in legacy mode. Refer to SCRDPSO bit in SWCTL2 register on page 92 0: No action 1: It indicates power shut down if PWRSLY is Legacy mode. **Note:** It always returns 0 when read.
0	R/W	0h	**Power Button Mode (PWRBTN)** This bit controls the power button mode in the SWUC. Refer to SCRDPBM bit in SWCTL2 register on page 92 0: Legacy 1: ACPI

6.2.3 Standard Logical Device Configuration Registers

Registers with index from 30h to F9h contain Logical Device configuration settings. LDN of the wanted logical device should be written to LDN register before accessing these registers.
This section lists a standard description of these registers. Some default values for each register and more detailed information for each logical device should be referred in each section.

6.2.3.1 Logical Device Activate Register (LDA)

Index: 30h

Bit	R/W	Default	Description
7-1	-	0h	**Reserved**
0	R/W	0b	**Logical Device Activation Control (LDACT)** 0: Disabled The registers (Index 60h-FEh) are not accessible. Refer to SIOEN bit in SIOCTRL 1: Enabled

6.2.3.2 I/O Port Base Address Bits [15:8] for Descriptor 0 (IOBAD0[15:8])

This register will be read-only if it is unused by a logical device.
The 16-bit base address must not be 0000h and might have the boundary limit for each logical device.

Index: 60h

Bit	R/W	Default	Description
7-0	R/W	Depend on Logical Device	**I/O Port Base Address Bits [15:8] for Descriptor 0 (IOBA[15:8])** This register indicates selected I/O base address bits 15-8 for I/O Descriptor 0.

6.2.3.3 I/O Port Base Address Bits [7:0] for Descriptor 0 (IOBAD0[7:0])

This register will be read-only if it is unused by a logical device.
The 16-bit base address must not be 0000h and might have the boundary limit for each logical device.

Index: 61h

Bit	R/W	Default	Description
7-0	R/W	Depend on Logical Device	**I/O Port Base Address Bits [7:0] for Descriptor 0 (IOBA[7:0])** This register indicates selected I/O base address bits 7-0 for I/O Descriptor 0.

6.2.3.4 I/O Port Base Address Bits [15:8] for Descriptor 1 (IOBAD1[15:8])

This register will be read-only if it is unused by a logical device.
The 16-bit base address must not be 0000h and might have the boundary limit for each logical device.

Index: 62h

Bit	R/W	Default	Description
7-0	R/W	Depend on Logical Device	**I/O Port Base Address Bits [15:8] for Descriptor 1 (IOBA[15:8])** This register indicates selected I/O base address bits 15-8 for I/O Descriptor 1.

6.2.3.5 I/O Port Base Address Bits [7:0] for Descriptor 1 (IOBAD1[7:0])

This register will be read-only if it is unused by a logical device.
The 16-bit base address must not be 0000h and might have the boundary limit for each logical device.

Index: 63h

Bit	R/W	Default	Description
7-0	R/W	Depend on Logical Device	**I/O Port Base Address Bits [7:0] for Descriptor 0 (IOBA[7:0])** This register indicates selected I/O base address bits 7-0 for I/O Descriptor 1.

6.2.3.6 Interrupt Request Number and Wake-Up on IRQ Enable (IRQNUMX)

This register will be read-only if it is unused by a logical device.

Index: 70h

Bit	R/W	Default	Description
7-5	-	0h	**Reserved**
4	R/W	0	**Wake-Up IRQ Enable (WKIRQEN)** Allow this logical device to trigger a wake-up event to SWUC. This bit should not be set in SWUC Logical Device since it is used to collect IRQ sources for SWUC. 0: Disabled 1: Enabled
3-0	R/W	Depend on Logical Device	**IRQ Number (IRQNUM)** Select the IRQ number (level) asserted by this logical device via SERIRQ. 00d: This logical device doesn't use IRQ. 01d-012d: IRQ1-12 are selected correspondingly. 14d-15d: IRQ14-15 are selected correspondingly. Otherwise: Invalid IRQ routing configuration.

6.2.3.7 Interrupt Request Type Select (IRQTP)

This register will be read-only if it is unused by a logical device.

Index: 71h

Bit	R/W	Default	Description
7-2	-	0h	**Reserved**
1	R/W	Depend on Logical Device	**Interrupt Request Polarity Select (IRQPS)** This bit indicates the polarity of the interrupt request. 0: IRQ request is buffered and applied on SERIRQ. 1: IRQ request is inverted before being applied on SERIRQ. This bit should be configured before the logical device is activated.
0	R/W	Depend on Logical Device	**Interrupt Request Triggered Mode Select (IRQTMS)** This bit indicates that edge or level triggered mode is used by this logical device and should be updated by EC firmware via EC2I since the triggered mode is configured in EC side registers. This bit is just read as previously written (scratch register bit) and doesn't affect SERIRQ operation. 0: edge triggered mode 1: level triggered mode

6.2.3.8 DMA Channel Select 0 (DMAS0)

Index: 74h

Bit	R/W	Default	Description
7-3	-	0h	**Reserved**
2-0	R	4h	**DMA Channel Select 0** A value of 4 indicates that no DMA channel is active.

6.2.3.9 DMA Channel Select 0 (DMAS1)

Index: 75h

Bit	R/W	Default	Description
7-3	-	0h	**Reserved**
2-0	R	4h	**DMA Channel Select 1** A value of 4 indicates that no DMA channel is active.

6.2.4 System Wake-Up Control (SWUC) Configuration Registers

This section lists default values for each register and more detailed information for this logical device. Some register bits will be read-only if unused.

Table 6-7. Host View Register Map via Index-Data I/O Pair, SWUC Logical Device

	7 0 Register Name	Index
Super I/O Control Reg	Logical Device Number (LDN = 04h)	07h
Logical Device Control And Configuration Registers	Logical Device Activate Register (LDA)	30h
	I/O Port Base Address Bits [15:8] for Descriptor 0 (IOBAD0[15:8])	60h
	I/O Port Base Address Bits [7:0] for Descriptor 0 (IOBAD0[7:0])	61h
	I/O Port Base Address Bits [15:8] for Descriptor 1 (IOBAD1[15:8])-Unused	62h
	I/O Port Base Address Bits [7:0] for Descriptor 1 (IOBAD1[7:0]) -Unused	63h
Selected if LDN Register=04h	Interrupt Request Number and Wake-Up on IRQ Enabled (IRQNUMX)	70h
	Interrupt Request Type Select (IRQTP)	71h

6.2.4.1 Logical Device Activate Register (LDA)

Index: 30h

Bit	R/W	Default	Description
7-0	R/W	00h	**Refer to section 6.2.3.1 on page 43.**

6.2.4.2 I/O Port Base Address Bits [15:8] for Descriptor 0 (IOBAD0[15:8])

Index: 60h

Bit	R/W	Default	Description
7-0	R/W	00h	**Refer to section 6.2.3.2 on page 43.**

6.2.4.3 I/O Port Base Address Bits [7:0] for Descriptor 0 (IOBAD0[7:0])

Index: 61h

Bit	R/W	Default	Description
7-0	R/W	00h	**Refer to section 6.2.3.3 on page 44.** Bits 4-0 (IOBAD0[4:0]) are forced to 00000b and can't be written. It means the base address is on the 32-byte boundary.

6.2.4.4 I/O Port Base Address Bits [15:8] for Descriptor 1 (IOBAD1[15:8])

This register is unused and read-only.

Index: 62h

Bit	R/W	Default	Description
7-0	R	00h	**Refer to section 6.2.3.4 on page 44.**

6.2.4.5 I/O Port Base Address Bits [7:0] for Descriptor 1 (IOBAD1[7:0])

This register is unused and read-only.

Index: 63h

Bit	R/W	Default	Description
7-0	R	00h	**Refer to section 6.2.3.5 on page 44.**

6.2.4.6 Interrupt Request Number and Wake-Up on IRQ Enable (IRQNUMX)

Index: 70h

Bit	R/W	Default	Description
7-0	R/W	00h	**Refer to section 6.2.3.6 on page 44.**

6.2.4.7 Interrupt Request Type Select (IRQTP)

Index: 71h

Bit	R/W	Default	Description
7-0	R/W	03h	**Refer to section 6.2.3.7 on page 45.**

6.2.5 KBC / Mouse Interface Configuration Registers

This section lists default values for each register and more detailed information for this logical device. Some register bits will be read-only if unused.

Table 6-8. Host View Register Map via Index-Data I/O Pair, KBC / Mouse Interface Logical Device

	7 0	Index
	Register Name	
Super I/O Control Reg	Logical Device Number (LDN = 05h)	07h
Logical Device Control And Configuration Registers	Logical Device Activate Register (LDA)	30h
	I/O Port Base Address Bits [15:8] for Descriptor 0 (IOBAD0[15:8]) –Unused	60h
	I/O Port Base Address Bits [7:0] for Descriptor 0 (IOBAD0[7:0]) –Unused	61h
	I/O Port Base Address Bits [15:8] for Descriptor 1 (IOBAD1[15:8]) –Unused	62h
	I/O Port Base Address Bits [7:0] for Descriptor 1 (IOBAD1[7:0]) –Unused	63h
Selected if LDN Register=05h	Interrupt Request Number and Wake-Up on IRQ Enabled (IRQNUMX)	70h
	Interrupt Request Type Select (IRQTP)	71h

6.2.5.1 Logical Device Activate Register (LDA)

Index: 30h

Bit	R/W	Default	Description
7-0	R/W	00h	**Refer to section 6.2.3.1 on page 43.**

6.2.5.2 I/O Port Base Address Bits [15:8] for Descriptor 0 (IOBAD0[15:8])

This register is unused and read-only.

Index: 60h

Bit	R/W	Default	Description
7-0	R	00h	**Refer to section 6.2.3.2 on page 43.**

6.2.5.3 I/O Port Base Address Bits [7:0] for Descriptor 0 (IOBAD0[7:0])

This register is unused and read-only.

Index: 61h

Bit	R/W	Default	Description
7-0	R	00h	**Refer to section 6.2.3.3 on page 44.**

6.2.5.4 I/O Port Base Address Bits [15:8] for Descriptor 1 (IOBAD1[15:8])

This register is unused and read-only.

Index: 62h

Bit	R/W	Default	Description
7-0	R	00h	**Refer to section 6.2.3.4 on page 44.**

6.2.5.5 I/O Port Base Address Bits [7:0] for Descriptor 1 (IOBAD1[7:0])

This register is unused and read-only.

Index: 63h

Bit	R/W	Default	Description
7-0	R	00h	**Refer to section 6.2.3.5 on page 44.**

6.2.5.6 Interrupt Request Number and Wake-Up on IRQ Enable (IRQNUMX)

Index: 70h

Bit	R/W	Default	Description
7-0	R/W	0Ch	**Refer to section 6.2.3.6 on page 44.**

6.2.5.7 Interrupt Request Type Select (IRQTP)

Index: 71h

Bit	R/W	Default	Description
7-0	R/W	03h	**Refer to section 6.2.3.7 on page 45.**

6.2.6 KBC / Keyboard Interface Configuration Registers

This section lists default values for each register and more detailed information for this logical device. Some register bits will be read-only if unused.

Table 6-9. Host View Register Map via Index-Data I/O Pair, KBC / Keyboard Interface Logical Device

	7 … 0 Register Name	Index
Super I/O Control Reg	Logical Device Number (LDN = 06h)	07h
Logical Device Control And Configuration Registers Selected if LDN Register=06h	Logical Device Activate Register (LDA)	30h
	I/O Port Base Address Bits [15:8] for Descriptor 0 (IOBAD0[15:8])	60h
	I/O Port Base Address Bits [7:0] for Descriptor 0 (IOBAD0[7:0])	61h
	I/O Port Base Address Bits [15:8] for Descriptor 1 (IOBAD1[15:8])	62h
	I/O Port Base Address Bits [7:0] for Descriptor 1 (IOBAD1[7:0])	63h
	Interrupt Request Number and Wake-Up on IRQ Enabled (IRQNUMX)	70h
	Interrupt Request Type Select (IRQTP)	71h

6.2.6.1 Logical Device Activate Register (LDA)

Index: 30h

Bit	R/W	Default	Description
7-0	R/W	00h	**Refer to section 6.2.3.1 on page 43.**

6.2.6.2 I/O Port Base Address Bits [15:8] for Descriptor 0 (IOBAD0[15:8])

Index: 60h

Bit	R/W	Default	Description
7-0	R/W	00h	**Refer to section 6.2.3.2 on page 43.** Bits 7-3 (IOBAD0[15:11]) are forced to 00000b and can't be written.

6.2.6.3 I/O Port Base Address Bits [7:0] for Descriptor 0 (IOBAD0[7:0])

Index: 61h

Bit	R/W	Default	Description
7-0	R/W	60h	**Refer to section 6.2.3.3 on page 44.**

6.2.6.4 I/O Port Base Address Bits [15:8] for Descriptor 1 (IOBAD1[15:8])

Index: 62h

Bit	R/W	Default	Description
7-0	R/W	00h	**Refer to section 6.2.3.4 on page 44.** Bits 7-3 (IOBAD1[15:11]) are forced to 00000b and can't be written.

6.2.6.5 I/O Port Base Address Bits [7:0] for Descriptor 1 (IOBAD1[7:0])

Index: 63h

Bit	R/W	Default	Description
7-0	R/W	64h	**Refer to section 6.2.3.5 on page 44.**

6.2.6.6 Interrupt Request Number and Wake-Up on IRQ Enable (IRQNUMX)

Index: 70h

Bit	R/W	Default	Description
7-0	R/W	01h	**Refer to section 6.2.3.6 on page 44.**

6.2.6.7 Interrupt Request Type Select (IRQTP)

Index: 71h

Bit	R/W	Default	Description
7-0	R/W	03h	**Refer to section 6.2.3.7 on page 45.**

6.2.7 Shared Memory/Flash Interface (SMFI) Configuration Registers

This section lists default values for each register and more detailed information for this logical device. Some register bits will be read-only if unused.

Table 6-10. Host View Register Map via Index-Data I/O Pair, SMFI Interface Logical Device

	7 … 0 Register Name	Index
Super I/O Control Reg	Logical Device Number (LDN = 0Fh)	07h
Logical Device Control And Configuration Registers	Logical Device Activate Register (LDA)	30h
	I/O Port Base Address Bits [15:8] for Descriptor 0 (IOBAD0[15:8])	60h
	I/O Port Base Address Bits [7:0] for Descriptor 0 (IOBAD0[7:0])	61h
	I/O Port Base Address Bits [15:8] for Descriptor 1 (IOBAD1[15:8])-Unused	62h
	I/O Port Base Address Bits [7:0] for Descriptor 1 (IOBAD1[7:0])-Unused	63h
Selected if LDN Register=0Fh	Interrupt Request Number and Wake-Up on IRQ Enabled (IRQNUMX) –Unused	70h
	Interrupt Request Type Select (IRQTP) -Unused	71h
	Shared Memory Configuration Register (SHMC)	F4h

6.2.7.1 Logical Device Activate Register (LDA)

Index: 30h

Bit	R/W	Default	Description
7-0	R/W	00h	**Refer to section 6.2.3.1 on page 43.**

6.2.7.2 I/O Port Base Address Bits [15:8] for Descriptor 0 (IOBAD0[15:8])

Index: 60h

Bit	R/W	Default	Description
7-0	R/W	00h	**Refer to section 6.2.3.2 on page 43.**

6.2.7.3 I/O Port Base Address Bits [7:0] for Descriptor 0 (IOBAD0[7:0])

Index: 61h

Bit	R/W	Default	Description
7-0	R/W	00h	**Refer to section 6.2.3.3 on page 44.** Bits 3-0 (IOBAD0[3:0]) are forced to 0000b and can't be written. It means the base address is on the 16-byte boundary.

6.2.7.4 I/O Port Base Address Bits [15:8] for Descriptor 1 (IOBAD1[15:8])

This register is unused and read-only.

Index: 62h

Bit	R/W	Default	Description
7-0	R	00h	**Refer to section 6.2.3.4 on page 44.**

6.2.7.5 I/O Port Base Address Bits [7:0] for Descriptor 1 (IOBAD1[7:0])

This register is unused and read-only.

Index: 63h

Bit	R/W	Default	Description
7-0	R	00h	**Refer to section 6.2.3.5 on page 44.**

6.2.7.6 Interrupt Request Number and Wake-Up on IRQ Enable (IRQNUMX)

This register is unused and read-only.

Index: 70h

Bit	R/W	Default	Description
7-0	R	00h	**Refer to section 6.2.3.6 on page 44.**

6.2.7.7 Interrupt Request Type Select (IRQTP)

This register is unused and read-only.

Index: 71h

Bit	R/W	Default	Description
7-0	R	00h	**Refer to section 6.2.3.7 on page 45.**

6.2.7.8 Shared Memory Configuration Register (SHMC)

Index: F4h

Bit	R/W	Default	Description
7-4	R/W	0h	**BIOS FWH ID (FWHID)** These bits correspond to the 4-bit ID which is part of a FWH transaction.
3	-	-	**Reserved**
2	-	-	**Reserved**
1	R/W	0b	**BIOS Extended Space Enable (BIOSEXTS)** This bit expands the BIOS address space to make this chip response the Extended BIOS address range.
0	-	-	**Reserved**

6.2.8 BRAMLD Configuration Registers

The BRAMLD is basically the same registers as BRAM mapped into the host side.

This section lists default values for each register and more detailed information for this logical device. Some register bits will be read-only if unused.

Table 6-11. Host View Register Map via Index-Data I/O Pair, BRAMLD Logical Device

	7 … 0 Register Name	Index
Super I/O Control Reg	Logical Device Number (LDN = 10h)	07h
Logical Device Control And Configuration Registers Selected if LDN Register=10h	Logical Device Activate Register (LDA)	30h
	I/O Port Base Address Bits [15:8] for Descriptor 0 (IOBAD0[15:8])	60h
	I/O Port Base Address Bits [7:0] for Descriptor 0 (IOBAD0[7:0])	61h
	I/O Port Base Address Bits [15:8] for Descriptor 1 (IOBAD1[15:8])	62h
	I/O Port Base Address Bits [7:0] for Descriptor 1 (IOBAD1[7:0])	63h
	Interrupt Request Number and Wake-Up on IRQ Enabled (IRQNUMX) –Unused	70h
	Interrupt Request Type Select (IRQTP) –Unused	71h
	P80L Begin Index (P80LB)	F3h
	P80L End Index (P80LE)	F4h
	P80L Current Index (P80LC)	F5h

6.2.8.1 Logical Device Activate Register (LDA)

Index: 30h

Bit	R/W	Default	Description
7-0	R/W	00h	**Refer to section 6.2.3.1 on page 43.** Refer to SIOEN bit in SIOCTRL and SIOEN bit in SIOCTRL Register.

6.2.8.2 I/O Port Base Address Bits [15:8] for Descriptor 0 (IOBAD0[15:8])

Index: 60h

Bit	R/W	Default	Description
7-0	R/W	00h	**Refer to section 6.2.3.2 on page 43.**

6.2.8.3 I/O Port Base Address Bits [7:0] for Descriptor 0 (IOBAD0[7:0])

Index: 61h

Bit	R/W	Default	Description
7-0	R/W	70h	**Refer to section 6.2.3.3 on page 44.** Bit 0 (IOBAD0[0]) is forced to 0b and can't be written. It means the base address is on the 2-byte boundary.

6.2.8.4 I/O Port Base Address Bits [15:8] for Descriptor 1 (IOBAD1[15:8])

Index: 62h

Bit	R/W	Default	Description
7-0	R/W	00h	**Refer to section 6.2.3.4 on page 44.**

6.2.8.5 I/O Port Base Address Bits [7:0] for Descriptor 1 (IOBAD1[7:0])

Index: 63h

Bit	R/W	Default	Description
7-0	R/W	72h	**Refer to section 6.2.3.5 on page 44.** Bit 0 (IOBAD0[0]) is forced to 0b and can't be written. It means the base address is on the 2-byte boundary.

6.2.8.6 Interrupt Request Number and Wake-Up on IRQ Enable (IRQNUMX)

Index: 70h

Bit	R/W	Default	Description
7-0	R/W	08h	**Refer to section 6.2.3.6 on page 44.**

6.2.8.7 Interrupt Request Type Select (IRQTP)

Index: 71h

Bit	R/W	Default	Description
7-0	R/W	00h	**Refer to section 6.2.3.7 on page 45.**

6.2.8.8 P80L Begin Index (P80LB)

Index: F3h

Bit	R/W	Default	Description
7-6	-	-	**Reserved**
5-0	R/W	-	**P80L Begin Index (P80LBI)** It indicates the P80L queue begins in BRAM Bank 1. Refer to section 7.16.3.1 on page 265.

6.2.8.9 P80L End Index (P80LE)

Index: F4h

Bit	R/W	Default	Description
7-6	-	-	**Reserved**
5-0	R/W	-	**P80L End Index (P80LEI)** It indicates the P80L queue ends in BRAM Bank 1. Refer to section 7.16.3.1 on page 265.

6.2.8.10 P80L Current Index (P80LC)

Index: F5h

Bit	R/W	Default	Description
7-6	-	-	**Reserved**
5-0	R/W	-	**P80L Current Index (P80LC)** It indicates the P80L queue current in BRAM Bank 1. Refer to section 7.16.3.1on page 265.

6.2.9 Power Management I/F Channel 1 Configuration Registers

This section lists default values for each register and more detailed information for this logical device. Some register bits will be read-only if unused.

Table 6-12. Host View Register Map via Index-Data I/O, PM1 Logical Device

	7 — Register Name — 0	Index
Super I/O Control Reg	Logical Device Number (LDN = 11h)	07h
Logical Device Control And Configuration Registers Selected if LDN Register=11h	Logical Device Activate Register (LDA)	30h
	I/O Port Base Address Bits [15:8] for Descriptor 0 (IOBAD0[15:8])	60h
	I/O Port Base Address Bits [7:0] for Descriptor 0 (IOBAD0[7:0])	61h
	I/O Port Base Address Bits [15:8] for Descriptor 1 (IOBAD1[15:8])	62h
	I/O Port Base Address Bits [7:0] for Descriptor 1 (IOBAD1[7:0])	63h
	Interrupt Request Number and Wake-Up on IRQ Enabled (IRQNUMX)	70h
	Interrupt Request Type Select (IRQTP)	71h

6.2.9.1 Logical Device Activate Register (LDA)

Index: 30h

Bit	R/W	Default	Description
7-0	R/W	00h	**Refer to section 6.2.3.1 on page 43.**

6.2.9.2 I/O Port Base Address Bits [15:8] for Descriptor 0 (IOBAD0[15:8])

It contains Data Register Base Address Register.

Index: 60h

Bit	R/W	Default	Description
7-0	R/W	00h	**Refer to section 6.2.3.2 on page 43.** Bits 7-3 (IOBAD0[15:11]) are forced to 00000b and can't be written.

6.2.9.3 I/O Port Base Address Bits [7:0] for Descriptor 0 (IOBAD0[7:0])

It contains Data Register Base Address Register.

Index: 61h

Bit	R/W	Default	Description
7-0	R/W	62h	**Refer to section 6.2.3.3 on page 44.**

6.2.9.4 I/O Port Base Address Bits [15:8] for Descriptor 1 (IOBAD1[15:8])

It contains Command/Status Register Base Address Register.

Index: 62h

Bit	R/W	Default	Description
7-0	R/W	00h	**Refer to section 6.2.3.4 on page 44.** Bits 7-3 (IOBAD1[15:11]) are forced to 00000b and can't be written.

6.2.9.5 I/O Port Base Address Bits [7:0] for Descriptor 1 (IOBAD1[7:0])

It contains Command/Status Register Base Address Register.

Index: 63h

Bit	R/W	Default	Description
7-0	R/W	66h	**Refer to section 6.2.3.5 on page 44.**

6.2.9.6 Interrupt Request Number and Wake-Up on IRQ Enable (IRQNUMX)

Index: 70h

Bit	R/W	Default	Description
3-0	R/W	01h	**Refer to section 6.2.3.6 on page 44.**

6.2.9.7 Interrupt Request Type Select (IRQTP)

Index: 71h

Bit	R/W	Default	Description
7-2	R/W	03h	**Refer to section 6.2.3.7 on page 45.**

6.2.10 Power Management I/F Channel 2 Configuration Registers

This section lists default values for each register and more detailed information for this logical device. Some register bits will be read-only if unused.

Table 6-13. Host View Register Map via Index-Data I/O, PM2 Logical Device

	7 0 Register Name	Index
Super I/O Control Reg	Logical Device Number (LDN = 12h)	07h
Logical Device Control And Configuration Registers	Logical Device Activate Register (LDA)	30h
	I/O Port Base Address Bits [15:8] for Descriptor 0 (IOBAD0[15:8])	60h
	I/O Port Base Address Bits [7:0] for Descriptor 0 (IOBAD0[7:0])	61h
	I/O Port Base Address Bits [15:8] for Descriptor 1 (IOBAD1[15:8])	62h
	I/O Port Base Address Bits [7:0] for Descriptor 1 (IOBAD1[7:0])	63h
	I/O Port Base Address Bits [15:8] for Descriptor 2 (IOBAD2[15:8])	64h
	I/O Port Base Address Bits [7:0] for Descriptor 2 (IOBAD2[7:0])	65h
Selected if LDN Register=12h	Interrupt Request Number and Wake-Up on IRQ Enabled (IRQNUMX)	70h
	Interrupt Request Type Select (IRQTP)	71h

6.2.10.1 Logical Device Activate Register (LDA)

Index: 30h

Bit	R/W	Default	Description
7-0	R/W	00h	**Refer to section 6.2.3.1 on page 43.**

6.2.10.2 I/O Port Base Address Bits [15:8] for Descriptor 0 (IOBAD0[15:8])

It contains Data Register Base Address Register.

Index: 60h

Bit	R/W	Default	Description
7-0	R/W	00h	**Refer to section 6.2.3.2 on page 43.** Bits 7-3 (IOBAD0[15:11]) are forced to 00000b and can't be written.

6.2.10.3 I/O Port Base Address Bits [7:0] for Descriptor 0 (IOBAD0[7:0])

It contains Data Register Base Address Register.

Index: 61h

Bit	R/W	Default	Description
7-0	R/W	68h	**Refer to section 6.2.3.3 on page 44.**

6.2.10.4 I/O Port Base Address Bits [15:8] for Descriptor 1 (IOBAD1[15:8])

It contains Command/Status Register Base Address Register.

Index: 62h

Bit	R/W	Default	Description
7-0	R/W	00h	**Refer to section 6.2.3.4 on page 44.** Bits 7-3 (IOBAD1[15:11]) are forced to 00000b and can't be written.

6.2.10.5 I/O Port Base Address Bits [7:0] for Descriptor 1 (IOBAD1[7:0])

It contains Command/Status Register Base Address Register.

Index: 63h

Bit	R/W	Default	Description
7-0	R/W	6Ch	**Refer to section 6.2.3.5 on page 44.**

6.2.10.6 I/O Port Base Address Bits [15:8] for Descriptor 2 (IOBAD2[15:8])

It contains Command/Status Register Base Address Register.

Index: 64h

Bit	R/W	Default	Description
7-0	R/W	00h	**Refer to section 6.2.3.4 on page 44.**

6.2.10.7 I/O Port Base Address Bits [7:0] for Descriptor 2 (IOBAD2[7:0])

It contains Command/Status Register Base Address Register.

Index: 65h

Bit	R/W	Default	Description
7-0	R/W	00h	**Refer to section 6.2.3.5 on page 44.** Bits 3-0 (IOBAD2[3:0]) are forced to 0000b and can't be written.

6.2.10.8 Interrupt Request Number and Wake-Up on IRQ Enable (IRQNUMX)

Index: 70h

Bit	R/W	Default	Description
7-0	R/W	01h	**Refer to section 6.2.3.6 on page 44.**

6.2.10.9 Interrupt Request Type Select (IRQTP)

Index: 71h

Bit	R/W	Default	Description
7-0	R/W	03h	**Refer to section 6.2.3.7 on page 45.**

6.2.11 Programming Guide

Host Side
To read or write the target register (TR)
at target address(TA) of PNPCFG
Approach 1

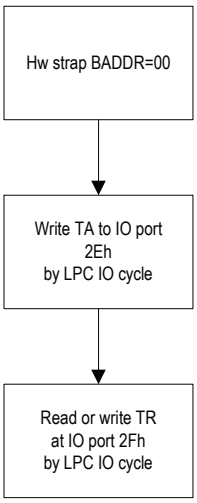

Host Side
To read or write the target register (TR)
at target address(TA) of PNPCFG
Approach 2

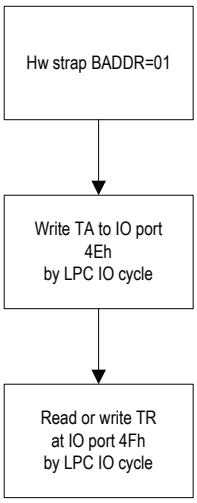

Host Side
To read or write the target register (TR)
at target address(TA) of PNPCFG
Approach 3

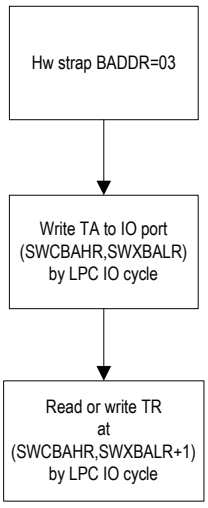

Host Side
To read or write the target register (TR)
at target Index (TI) of PNPCFG
TI = 00h~2Eh
(Assume BADDR=00)

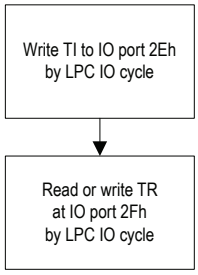

Host Side
To read or write the target register (TR)
at target Index(TI) of PNPCFG
TI=30h~FEh, belongs to target logical device (TLD)
(Assume BADDR=00)

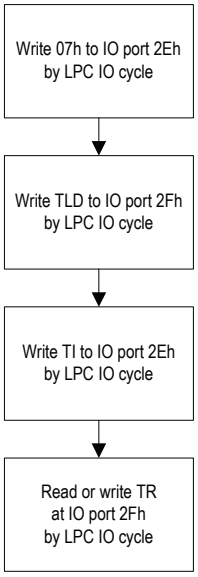

Figure 6-2. Program Flow Chart for PNPCFG

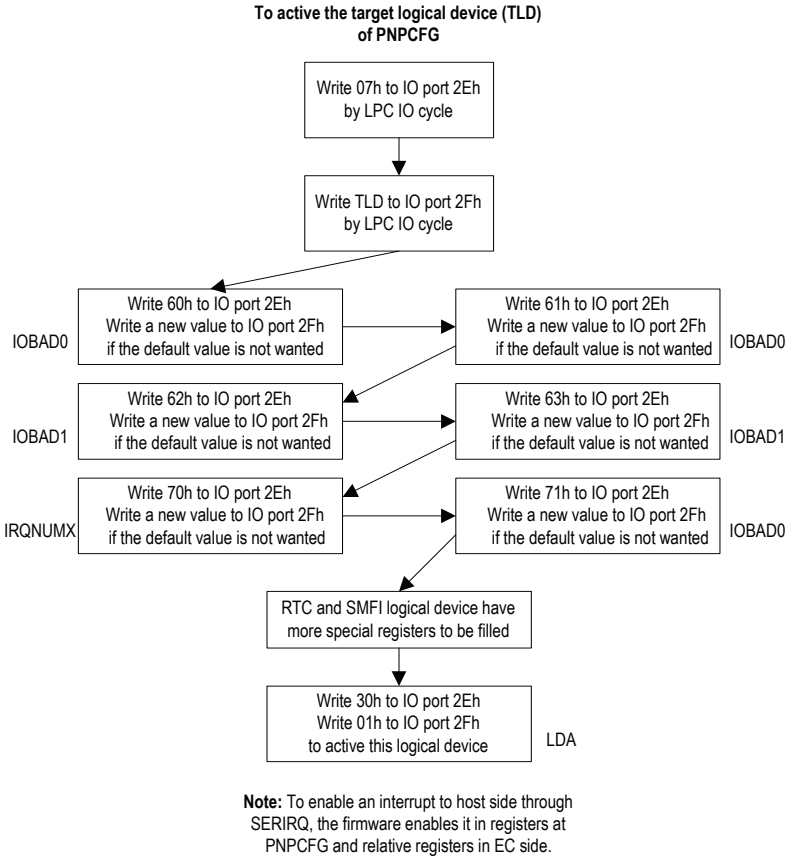

See also section 7.12.5 on page 249 for accessing PNPCFG through EC2I.

6.3 Shared Memory Flash Interface Bridge (SMFI)

6.3.1 Overview

The bridge provides the host to access the shared memory. It also provides EC code address space mapped into host domain address space, and locking mechanism for read/write protection.

6.3.2 Features

- Supports memory mapping between host domain and EC domain
- Supports read/write/erase flash operations and locking mechanism
- Supports two shared memory access paths: host and EC
- Supports LPC/FWH flash and up to 32M bytes
- Supports serial flash and up to 16M bytes

6.3.3 Function Description

6.3.3.1 Supported Flash

IT8512 - LPC/FWH Flash:

Supported Interface:

LPC or FWH interface. If the flash supports both interfaces, FWH will be used.

Supported ID:

For LPC flash: Only ID = 0h is supported, while ID of LPC flash reflects the memory mapping range.

For FWH flash: Automatically recognize FWH ID between 0h-Fh, and FWH ID can be used as system ID purpose.

Requirement:

The first instruction of the firmware must be " LJMP ADDR" and ADDR must be located in 00XXh or FEXXh. (X denotes dont-care)

Requirement:

Only one LPC or FWH flash can be attached on LPC/FWH flash bus.

IT8512 – Serial Flash:

Requirement:

Only one serial flash can be attached.

6.3.3.2 Host to M Bus Translation

The SMFI provides an interface between the host bus and the M bus. The flash is mapped into the host memory address space for host accesses. The flash is also mapped into the EC memory address space for EC accesses.

An M bus transaction is generated by the host bus translations and has the following three types:

- 8-bit LPC Memory Read/Write
- 8-bit FWH Read/Write
- 8-bit Host-Indirect Memory Read/Write

After the LPC address translation is done, the host memory transaction is forwarded to M-bus (flash interface) if it is accessing an unprotected region. The host side can't issue a write transaction until the firmware write 1 to HOSTWA bit SMECCS register. See also Table 3-3 on page 8.

6.3.3.3 Memory Mapping

The host memory addresses are mapped into the following regions shown in the following table. Some regions are always mapped and some are mapped only when the corresponding register is active. And these regions may be mapped into the same range in the flash space. See also Table 3-1 on page 7.

Table 6-14. Mapped Host Memory Address

Memory Address Range (byte)	Region Description
FFC0_0000h-FFFF_FFFFh	**386 Mode BIOS Range** This is the memory space whose maximum value is up to 4M bytes. If the flash size defined in FMSSR register is smaller than 4M bytes, the remaining space is treated as "Out of Range",
000F_0000h-000F_FFFFh	**Legacy BIOS Range** The total is 64K inside lower 1M legacy BIOS range.
000E_0000h-000E_FFFFh	**Extended Legacy BIOS Range** The total is 64K inside lower 1M legacy BIOS range.

The following memory transactions are based on LPC, FWH or I/O Cycles which are valid only when corresponding HBREN bit in HCTRL2R register is enabled.

Legacy BIOS Range
Always handle.

Extended Legacy BIOS Range
Handle only when BIOSEXTS bit in SHMC register is active. Otherwise, transactions are ignored.

386 Mode BIOS Range
Always handle.

Host-Indirect Memory Address
Host-Indirect Memory Cycles are memory transactions based on LPC I/O Cycles.
This address specified in SMIMAR3-0 is used as follows:
Translated 32-bit host address = { SMIMAR3[7:0], SMIMAR2[7:0], SMIMAR1[7;0], SMIMAR0[7:0]}

6.3.3.4 Host-Indirect Memory Read/Write Transaction

The following I/O mapped registers can be used to perform an M bus transaction using an LPC I/O transaction:

- **Host-Indirect Memory Address registers (SMIMAR 3-0)**

Stand for host address bit 31 to 0.

- **Host-Indirect Memory Data register (SMIMDR)**

Stand for read or write data bit 7 to 0.

When LPC I/O writes to IMD register, SMFI begins a flash read with SMIMAR3-0 as the addresses. IT8512 responses Long-Waits until the transaction on M-bus (flash interface) is completed.
When LPC I/O read cycle from SMIMDR register begins a flash write with using the SMIMAR3-0 as the address. The data back from SMIMDR register is used to complete the LPC I/O read cycle.
Host-Indirect memory read/write transactions use the same memory mapping and locking mechanism as the LPC memory read/write transactions.

6.3.3.5 EC-Indirect Memory Read/Write Transaction

R8032TT in IT8512 can access full flash address range via "MOVX" instruction.
This kind of access is useful to

1. read flash ID for EC BIOS.
2. customize user-defined flash programming interface.
3. put extra BIOS data outside EC 64K.

4. access memory-mapped registers on LPC/FWH flash and control read/write lock registers and reading GPI registers on flash side.

- **EC-Indirect Memory Address registers (ECINDAR3-0)**

Stand for flash address bit 31 to 0.

- **EC-Indirect Memory Data register (ECINDDR)**

Stand for read or write data bit 7 to 0.

6.3.3.6 Locking Between Host and EC Domains

A hardware arbiter handles flash read/write translation between the host and EC side. Normally the grant is parked on the EC side and switches to the host side when the memory transaction is on LPC bus.

If the EC side is code fetching, any host access will be deferred or aborted depending on HERES bit in SMECCS register.
If the host side is accessing, the EC side is pending to code fetch.
When the host wants to erase or program the flash, the signaling interface (Semaphore Write or KBC/PMC extended command) notifies the firmware to write 1 to HOSTWA bit in SMECCS register and relative register listed in Table 3-3 on page 8. EC 8032 should fail to code fetch due to flash busying with erasing/programming and Scratch ROM should be applied (see also section 6.3.3.11). Once the host accessing to the flash is completed, the host should indicate this to the EC, allowing EC to clear HOSTWA bit and resume normal operation. The EC can clear HOSTWA bit at any time, and prevent the host from issuing any erase or program operations.

6.3.3.7 Host Access Protection

The software can use a set of registers in EC side to control the host read/write protection functionality.

The EC can override the host settings and prevent host from accessing to certain regions of the shared memory. The override may be set individuality for read and write.

After reset, all memory ranges are allowed host read but inhibited to write (erase/program).

Some LPC/FWH flashes support memory-mapped registers which are always addressed below the base address of physical memory.

For example, a 512K bytes LPC/FWH has a physical memory content based on FFF8_0000h, and it may have a memory-mapped “Lock Register” located at FFBF_0002h.

EC firmware has the ability to access these on-flash memory-mapped registers via EC-Indirect memory.
The ability of the host side to access them is controlled by FMSSR register.

1. Disable accessing on the host side:
   Modify FMSSR register to control the flash size seen by the host side and make it the physical flash size.
2. Enable accessing on the host side:
   Modify FMSSR register to control the flash size seen by the host side and make it larger than the physical flash size and cover the address space of memory-mapped registers if its address space is inside the maximum flash memory size.
   For example, modify FMSSR register as 8M bytes for a 512K bytes, then the host side can access its “Lock Register” located at FFBF_0002h.
   However, this method is not recommended since it may be not applied to the flash with large size and it may has issue if another device also decodes LPC/FWH memory cycle.

6.3.3.8 LPC/FWH Flash Performance Consideration

Clock-tick number spent for each cycle = 17 + M + N
M = inserted wait cycle (LFSW1T bit in FLHCTRL1R register)
N = short-wait count of LPC/FWH flash

Clock-tick number spent for branching instruction = 0

Clearing LFNABR bit in FLHCTRL1R register (LPC/FWH Don't Abort) get better performance while host LPC memory access performance if flash can accept abort cycle.

The selection of these registers depends on the flash specification.

Note that the flash clock frequency is FreqPLL.
(FreqPLL is listed in Table 10-1 on page 299).

The read performance on M-bus will be very poor for Host LPC if this bit is set.

6.3.3.9 Serial Flash Performance Consideration

Clock-tick number spent for each cycle = 8

Clock-tick number spent for branching instruction = M + (4 + N) x 8
M = SCE# Min High Width = 1 + SCEMINHW
(SCEMINHW field in FLHCTRL2R register
N = 1 if "Fast Read" (SPIFR bit in FLHCTRL1R register)

The selection of these registers depends on the flash specification.
Note that the flash clock frequency is FreqPLL.
(FreqPLL is listed in Table 10-1 on page 299)

Host LPC has very poor read performance on M-bus if HOSTWA bit in SMECCS register is set.

6.3.3.10 Response to a Forbidden Access

A forbidden access is generated by a translated host address which is protected.
The EC responds to a forbidden access by generating an interrupt INT23 (if enabled by HERRIEN bit in SMECCS register). HWERR and HRERR in the SMECCS register indicate the forbidden access to write or read respectively .The response on the host bus is according to HERES field in SMECSS register.

HERES Field
00b: Drive Long Wait for read; ignore write
01b: Read back 00h; ignore write
10b: Drive error SYNC for both read and write
11b: Read back long sync; write back error sync

6.3.3.11 Scratch SRAM

There are five internal Scratch SRAM No 0-4 which are always mapped into data space and may be mapped into code space if their corresponding code space mapping registers are enabled. It also means that Scratch SRAM may be mapped into data and code space at the same time and the firmware on Scratch ROM can access the same Scratch RAM. It is called Scratch RAM when being located at data space (default after reset) and called Scratch ROM when being located at code space.

Each of these five Scratch SRAM can be mapped into code space with any base addresses without the boundary limit. More than one Scratch SRAM No. can be mapped into code space with an overlay range.

Figure 6-3. Scratch SRAM in Data Space

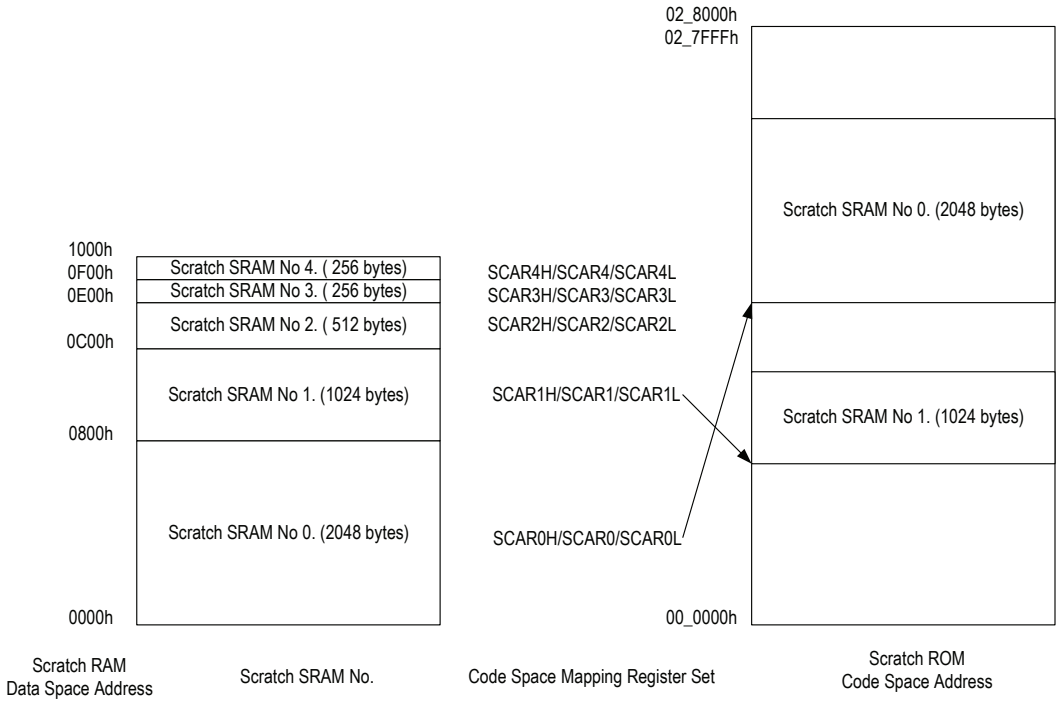

Each Scratch SRAM No. has three corresponding code space mapping registers in Figure 6-3. Scratch SRAM in Data Space. To enable a Scratch SRAM to be mapped into code space, refer to the following steps with code space mapping registers.

For Scratch SRAM No. 0:

SC0A17-0 field (18-bit) is the address of Scratch SRAM No. 0 and has been translated according to “Mapped Flash Address Range” field in Table 3-2. EC/Flash Mapping on page 8. Also refer to ECBB field in FECBSR register on page 70.

The base address in SC0A17-0 field is only valid if it is between 00_0000h and 02_7FFFh.

To enable the code space mapping of Scratch No. 0:
Make SC0A17-0 field is between 00_0000h and 02_7FFFh.
To disable the code space mapping of Scratch No. 0:
Write 11b to SC0A17-16 field.

Scratch SRAM No.0 is always located in data space regardless of mapping into code space.

So is Scratch SRAM No. 1-4.

This SSMC bit in FBCFG register is obsolete. This register bit is only used to be compatible with old IT8510 firmware and should not be used in new firmware.

6.3.3.12 DMA for Scratch SRAM

DMA (Direct Memory Access) is used to shadow flash content of a specified address range inside code space to Scratch SRAM. The performance of DMA is much better than "MOVC-MOVX" steps.

To enable DMA operation to Scratch SRAM No. 0, please follow the steps below:

1. Write data to SCARH register with wanted SC0A17-16 field and 1 to NSDMA bit.
2. Write data to SCAR0L register with wanted SC0A7-0 field.
3. Write data to SCAR0M register with wanted SC0A15-8 field.
4. Write data to SCARH register with wanted SC0A17-16 field and 0 to NSDMA bit.
   DMA operation is started and code space mapping is enabled after DMA operation is finished.

If the firmware wants to modify the mapped base address in code space, more steps below should be taken:

5. Write data to SCAR0H register with 11b to SC0A17-16 field.
   Disable code space mapping first since SC0A17-0 are modified in three writings and may be invalid before writing is completed.
6. Write data to SCAR0M/SCAR0L register with wanted SC0A15-0 field.
7. Write data to SCAR0H register with wanted SC0A17-16 field.
   Enable code space mapping after this step.

So is Scratch SRAM No. 1-4.
See also 7.1.10.4 Code snippet of Copying Flash Content to Scratch ROM (DMA) on page 152.

6.3.3.13 Trusted ROM/RAM

Trusted ROM and RAM are dedicated for TMBKC firmware.

Trusted ROM is where TMKBC firmware locates.

If TMKBCEN bit in CNF register is asserted, TMKBC, PS/2 and KBS modules can not be accessed by the firmware unless the firmware is executing from Trusted ROM.

The firmware is treated as Trusted ROM if
1. it is located inside Trusted ROM range defined in TROMR register.
2. it is fetched from the flash, or Scratch ROM is shadowed by DMA without modifying its mapped base address.

Trusted RAM is Scratch RAM that has asserted Trust Flag. Only Trusted ROM can access Trusted RAM.

6.3.3.14 Flash Programming via Host LPC Interface with Scratch SRAM

When programming flash is processing, the flash will be busy and code fetch from flash by 8032 and will be invalid and cause 8032 fail to execute instructions. It means the firmware must copy necessary instructions from code space to Scratch SRAM, enable mapping Scratch SRAM to Scratch ROM, and jump to Scratch ROM before programming flash.

Flash Programming Steps:
(a) The host side communicates to the EC side via KBC/PMC extended or semaphore registers
(b) EC side: Write 1 to HOSTWA bit in SMECCS register
(c) EC side: Write 0 to SMECOWPR0-9 (for example, 4-M bytes range)
    (Refer to Table 3-3. Flash Read/Write Protection Controlled by EC Side on page 8)
(d) EC side: Copy necessary code to Scratch RAM (by MOVC-MOVX steps or DMA)
(e) EC side: Enable code space mapping of Scratch SRAM
(f) EC side: Make the host processor enter SMM mode if necessary
(g) EC side: Jump instruction to Scratch ROM
(h) Host side: Set relative memory-write registers in South-Bridge
(i) Host side: Start flash programming
(j) End flash programming and reset EC domain if necessary.
    (Refer to section 5.5 on page 26)

Note: Do not let EC enter Idle/Doze/Sleep mode while processing flash programming flow.

6.3.3.15 Force 8032 to Code Fetch from Internal SRAM

For LPC/FWH flash, it may not be accessed immediately after FLRST# low-to-high transition until a time delay listed on flash specification.

For serial flash, it may not be accessed immediately after issuing “Release Power Down (ABh)” instruction until a time delay is listed on flash specification.

To make sure there is no access cycle on the flash after waking up from the Sleep mode, the firmware must execute a delay routine in Scratch ROM.

It means that “ORL PCON” instruction, delay routine and interrupt entry (e.g.0013h for INT1#) are all required to be code-fetch from internal SRAM (Scratch).

6.3.3.16 Force 8032 to Clear Dynamic Caches

For LPC/FWH/serial flash, after the flash is modified by the host program, the dynamic caches must be cleared since they contain old and invalid cache content. Refer to section 7.1.10.6 Code snippet of Clearing Dynamic Caches on page 153.

6.3.3.17 Serial Flash Programming

There is Follow Mode dedicated for serial flash programming through host LPC interface.
Follow Mode is enabled after

1. writing 1 to HOSTWA bit in SMECCS register in the EC side.
2. writing 00h to LPC/FWH Address FFFF_FExxh in the host side

In Follow Mode,

1. writing 00h to LPC/FWH Memory Address FFFF_FExxh generates SCE# with high level.
2. writing data to LPC/FWH Memory Address FFFF_FDxxh generates SCE# with low level and SI with written data.
3. reading data from LPC/FWH Memory Address FFFF_FDxxh generates SCE# with low level and read data from SO.
4. all the above actions are clocked by 8 SCK clock-tick and SCK is stopped in other cases.

Figure 6-4. Follow Mode for Serial Flash (e.g. Fast Read Instruction)

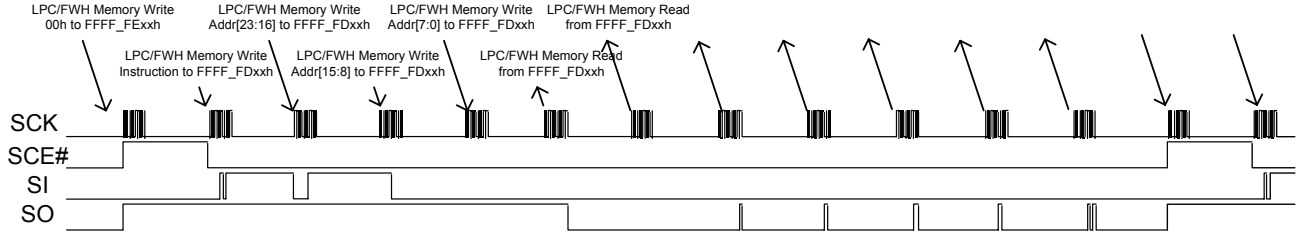

6.3.4 EC Interface Registers

The registers of SMFI can be divided into two parts: Host Interface Registers and EC Interface Registers and this section lists the EC interface. The EC interface can only be accessed by the internal 8032 processor. The base address for SMFI is 1000h.

These registers are listed below.

Table 6-15. EC View Register Map, SMFI

7 — 0	Offset
FBIU Configuration (FBCFG)	00h
Flash Programming Configuration Register (FPCFG)	01h
Flash EC Code Banking Select Register (FECBSR)	05h
Flash Memory Size Select Register (FMSSR)	07h
Shared Memory EC Control and Status (SMECCS)	20h
Shared Memory Host Semaphore (SMHSR)	22h
Shared Memory EC Override Read Protect 0-1 (SMECORPR0-1)	23h-24h
Shared Memory EC Override Write Protect 0-1 (SMECOWPR0-1)	29h-2Ah
FWH Flash ID Register (FWHFIDR)	30h
Flash Control Register 1 (FLHCTRL1R)	31h
Flash Control Register 2 (FLHCTRL2R)	32h
Reserved	33h
uC Control Register (UCCTRLR)	34h
Host Control 2 Register (HCTRL2R)	36h
Trusted ROM Register (TROMR)	37h
EC-Indirect Memory Address Register 0 (ECINDAR0)	3Bh
EC-Indirect Memory Address Register 1 (ECINDAR1)	3Ch
EC-Indirect Memory Address Register 2 (ECINDAR2)	3Dh
EC-Indirect Memory Address Register 3 (ECINDAR3)	3Eh
EC-Indirect Memory Data Register (ECINDDR)	3Fh
Scratch SRAM 0 Address Low Byte Register (SCAR0L)	40h
Scratch SRAM 0 Address Middle Byte Register (SCAR0M)	41h
Scratch SRAM 0 Address High Byte Register (SCAR0H)	42h
Scratch SRAM 1 Address Low Byte Register (SCAR1L)	43h
Scratch SRAM 1 Address Middle Byte Register (SCAR1M)	44h
Scratch SRAM 1 Address High Byte Register (SCAR1H)	45h
Scratch SRAM 2 Address Low Byte Register (SCAR2L)	46h
Scratch SRAM 2 Address Middle Byte Register (SCAR2M)	47h
Scratch SRAM 2 Address High Byte Register (SCAR2H)	48h
Scratch SRAM 3 Address Low Byte Register (SCAR3L)	49h
Scratch SRAM 3 Address Middle Byte Register (SCAR3M)	4Ah
Scratch SRAM 3 Address High Byte Register (SCAR3H)	4Bh
Scratch SRAM 4 Address Low Byte Register (SCAR4L)	4Ch
Scratch SRAM 4 Address Middle Byte Register (SCAR4M)	4Dh
Scratch SRAM 4 Address High Byte Register (SCAR4H)	4Eh

6.3.4.1 FBIU Configuration Register (FBCFG)

The FBIU (Flash Bus Interface Unit) directly interfaces with the flash device. The FBIU also defines the access time to the flash base address from 00_0000h to 3F_FFFFh (4M bytes). EWR bit controls memory cycles on M-bus (flash interface).

Address Offset: 00h

Bit	R/W	Default	Description
7	-	0b	**Scratch SRAM Map Control (SSMC)** 0: Normal 1: Scratch SRAM No. 0, whose size is 2K bytes, is mapped into F800h-FFFFh in code space and overrides the settings in SCAR0H/SCAR0M/SCAR0L register. This bit is obsolete and is only used to be compatible with old IT8510 firmware and should not be used in new firmware. Note that the following is the definition of this register field in IT8510. 0: Scratch RAM (data space). 1: Scratch ROM (code space).
6-2	-	0h	**Reserved**
1	-	-	**Reserved**
0	-	-	**Reserved**

6.3.4.2 Flash Programming Configuration Register (FPCFG)

This register provides general control on banking and flash standby.

Address Offset: 01h

Bit	R/W	Default	Description
7	R/W	1b	**Banking Source Option (BSO)** 0: Use 8032 P1[0] and P1[1] as code banking source. 1: Use ECBB[1:0] in FECBSR register as code banking source. Using P1 as banking source has less instruction count since only "MOV" is invoked rather than "MOVX" although T2 and T2EX are used in other bits in P2.
6	R/W	LCP/FWH flash: 1b Serial flash: 0b	**Auto Flash Standby (AFSTBY)** LPC/FWH flash: 1: Stop flash access in Idle/Doze/Sleep mode and deselect FLRST# in Sleep mode. Notice the flash may not be accessed immediately after FLRST# low-to-high transition until a time delay listed on flash specification. See also section 6.3.3.15 Force 8032 to Code Fetch from Internal SRAM on page 66. 0: Prevent the flash from entering the standby mode Serial flash: 1: Stop flash access in Idle/Doze/Sleep mode and issue "Deep Power Down (B9h)" instruction before entering Sleep mode and issue "Release Deep Power Down (ABh)" instruction after waking up from Sleep mode. See also section 6.3.3.15 Force 8032 to Code Fetch from Internal SRAM on page 66. 0: Prevent the flash from entering the standby mode
5	R/W	1b	**Reserved**
4	-	-	**Reserved**
3-0	R/W	11111b	**Reserved**

6.3.4.3 Flash EC Code Banking Select Register (FECBSR)

The register is used to select EC banking area Bank 0~3 when BSO =1 in FPCFG register.

Address Offset: 05h

Bit	R/W	Default	Description
7-2	-	0h	**Reserved**
1-0	R/W	00b	**EC Banking Block (ECBB)** When ECBB is set to 00, EC code uses conventional code area (maximum 64k) as code memory. Common Bank 32k-byte flash mapping range is from 00_0000h to 00_7FFFh. Bank 0 32k-byte flash mapping range is from 00_8000h to 00_FFFFh. Bank 1 32k-byte flash mapping range is from 01_0000h to 01_7FFFh. Bank 2 32k-byte flash mapping range is from 01_8000h to 01_FFFFh. Bank 3 32k-byte flash mapping range is from 02_0000h to 02_7FFFh. See also Figure 3-1 on page 6. Bits 1-0: 00: Select Common Bank + Bank 0 01: Select Common Bank + Bank 1 10: Select Common Bank + Bank 2 11: Select Common Bank + Bank 3 If A15 of 8032 code memory equals to 0, select Common Bank, otherwise select Bank 0, 1, 2 or 3.

6.3.4.4 Flash Memory Size Select Register (FMSSR)

The register provides the selection for the external flash memory size.

Address Offset: 07h

Bit	R/W	Default	Description
7-6	-	0h	**Reserved**
5-0	R/W	111111b	**Flash Memory Size Select (FMSS)** These bits select the external flash memory size. These bits only affect the host memory size "seen" by SouthBridge and don't affect address decoder in the EC side. See also Table 3-1. Host/Flash Mapping on page 7. If SouthBridge issues LPC Memory Cycles as memory transaction, this field must be selected not to conflict with other memory devices on LPC bus. If SouthBridge issues FWH Cycles as memory transaction, there is no conflict issue since each FWH ID has its dedicated 4G memory space. **Bits** **543210 Memory Size (bytes)** 111111b: 4M 011111b: 2M 001111b: 1M 000111b: 512K 000011b: 256K 000001b: 128K Or 00h: 128K (2^17) 02h: 256K (2^18) 04h: 512K (2^19) 06h: 1M (2^20) 08h: 2M (2^21) 0Ah: 4M (2^22) 0Ch: 8M (2^23) 0Eh: 16M (2^24) 10h: 32M (2^25) 12h: 64M (2^26) 14h: 128M (2^27) 16h: 256M (2^28) Otherwise: Reserved

6.3.4.5 Shared Memory EC Control and Status Register (SMECCS)

The following set of registers is accessible only by the EC. The registers are applied to VSTBY.
This register provides the flash control and status of a restricted access.

Address Offset: 20h

Bit	R/W	Default	Description
7	R/W	0b	**Host Semaphore Interrupt Enable (HSEMIE)** It enables interrupt to 8030 via INT22 of INTC. 0: Disable the host semaphore (write) interrupt to the EC. 1: The interrupt is set (level high) if HSEMW bit is set.
6	R/WC	0b	**Host Semaphore Write (HSEMW)** 0: Host has not written to HSEM3-0 field in SMHSR register. 1: Host has written to HSEM3-0 field in SMHSR register. Writing 1 to this bit to clear itself and clear internal detect logic. Writing 0 has no effect.
5	R/W	0b	**Host Write Allow (HOSTWA)** 0: The SMFI does not generate write transactions on M-bus. 1: The SMFI can generate write transactions on M-bus. The read performance on M-bus will be very poor for Host LPC if this bit is set.
4-3	R/W	00b	**Host Error Response (HERES)** These bits control response types on read/write translation from/to a protected address. 1-0 Number 00: Drive Long Wait for read; ignore write 01: Read back 00h; ignore write 10: Drive error SYNC for both read and write 11: Read back long sync; write back error sync
2	R/W	0b	**Host Error Interrupt Enable (HERRIEN)** It enables interrupt to 8030 via INT23 of INTC. 0: Disable 1: The interrupt is set (level high) if HRERR or HWERR bit is set.
1	R/WC	0b	**Host Write Error (HWERR)** 0: No error is detected during a host-initiated write. 1: It represents the host write to a write-protected address. Writing 1 to this bit clears it to 0. Writing 0 has no effect.
0	R/WC	0b	**Host Read Error (HRERR)** 0: No error is detected during a host-initiated read. 1: It represents the host reads to a read-protected address. Writing 1 to this bit clears it to 0. Writing 0 has no effect.

6.3.4.6 Shared Memory Host Semaphore Register (SMHSR)

This register provides eight semaphore bits between the EC and the host. Bits 3-0 may be set by the host and Bits 7-4 may be set by the EC. The register is reset on host domain hardware reset.
This is the register the same as the one in section 6.3.5.6 but they are in different views.

Address Offset: 22h

Bit	R/W	Default	Description
7-4	R/W	0h	**EC Semaphore (CSEM3-0)** These four bits may be written by the EC and read by both the host and the EC
3-0	R	0h	**Host Semaphore (HSEM3-0)** These four bits may be written by the host and read by both the host and the EC.

6.3.4.7 Shared Memory EC Override Read Protect Registers 0-1 (SMECORPR0-1)

Refert to Table 3-3. Flash Read/Write Protection Controlled by EC Side on page 8.

Address Offset: 23h

Bit	R/W	Default	Description
7-0	R/W	00h	**Override Read Protect Low Address (ORPLA7-0)** The default values make all the flash ranges readable.

Address Offset: 24h

Bit	R/W	Default	Description
7-1	-	-	**Reserved**
0	R/W	0b	**Override Read Protect (ORLA8)** The default values make all the flash ranges readable.

6.3.4.8 Shared Memory EC Override Write Protect Registers 0-1 (SMECOWPR0-1)

Refert to Table 3-3. Flash Read/Write Protection Controlled by EC Side on page 8.

Address Offset: 29h

Bit	R/W	Default	Description
7-0	R/W	11111111b	**Override Write Protect Low Address (OWPLA7-0)** The default values make all the flash ranges write-protected.

Address Offset: 2Ah

Bit	R/W	Default	Description
7-1	-	-	**Reserved**
0	R/W	1b	**Override Write Protect (OWP8)** The default values make all the flash ranges write-protected.

6.3.4.9 FWH Flash ID Register (FWHFIDR)

For LPC/FWH flash only.
Flash ID is only available for FWH flash. Always set LPC flash ID as 0h.
The FWH flash ID detected by the IT8512 can be used for system purpose like hardware strap ID7-0.

Address Offset: 30h

Bit	R/W	Default	Description
7-4	-	-	**Reserved**
3-0	R	0h	**FWH Flash ID (FWHFID)** FWH ID of FWH flash can be any value between 0h and Fh and these four bits represent the ID automatically recognized by EC.

6.3.4.10 Flash Control 1 Register (FLHCTRL1R)

Address Offset: 31h

Bit	R/W	Default	Description
7-5	-	-	**Reserved**
4	R/W	1b	**LPC/FWH Don't Abort (LFNABR)** For LPC/FWH flash: 1b: SMFI never issues abort cycles to LPC/FWH flash. 0b: SMFI possibly issues abort cycle and gets better performance while host LPC access.
			Fast Read (SPIFR) For serial flash: 1b: Uses "Fast Read" cycle (instruction 0Bh to serial flash). 0b: Uses "Read" cycle (instruction 03h to serial flash). The performance of "Read" cycle is better than "Fast Read" cycle in the same frequency since "Fast Read" cycle request 8 dummy clock ticks in each cycle. The attached must support "Fast Read" cycle since it's default cycle to serial flash.
3	R/W	1b	**LPC/FWH/Serial Wait 1T (LFSW1T)** For LPC/FWH flash: 1b: Input data are internally inserted 1T wait-cycle to be compatible with flash with lower "data-valid time". 0b: No wait-cycle and get better performance. Refer to Table 10-9. LPC/FWH Flash Cycle AC Table on page 302. For serial flash: Always write 1 to it.
2-0	-	-	**Reserved**

6.3.4.11 Flash Control 2 Register (FLHCTRL2R)

For serial flash only.

Address Offset: 32h

Bit	R/W	Default	Description
7-3	-	-	**Reserved**
2-0	R/W	011b	**SCE# Min High Width (SCEMINHW)** 000b: 1T 001b: 2T 010b: 3T 011b: 4T 100b: 5T 101b: 6T 110b: 7T It depends on the "SCE# High Time" on flash specification. Small value gets better performance. This register may needs to be modified before the PLL frequency is changed.

6.3.4.12 uC Control Register (UCCTRLR)

Address Offset: 34h

Bit	R/W	Default	Description
7	R/W	0b	**UC Burst Mode (UCBST)** 0: default 1: for chipset that issues LPC Abort if LPC Long-wait count during a LPC Memory cycle is greater than 255. This bit can be modified only before VCC power is supplied.
6-3	-	-	**Reserved**
2-0	R/W	5h	**uC Burst Threshold (UCTH)** 5h: default 3h: for chipset that issues LPC Abort if LPC Long-wait count during a LPC Memory cycle is greater than 255. Otherwise: reserved. This field can be modified only before VCC power is supplied.

6.3.4.13 Host Control 2 Register (HCTRL2R)

Address Offset: 36h

Bit	R/W	Default	Description
7	R/W	1b	**Host Bridge Enable (HBREN)** 1: The host memory cycle is decoded 0: otherwise This bit can be modified only before VCC power is supplied.
6	R/W	0b	**Safe Host Bridge (SHBR)** 1: Host PCI clock is less than 33MHz. 0: otherwise It has the same affection as SLWPCI bit in MBCTRL register in the host side.
5-3	-	-	**Reserved**
2-0	-	-	**Reserved**

6.3.4.14 Trusted ROM Register (TROMR)

Address Offset: 37h

Bit	R/W	Default	Description
7-1	R/W	0h	**Trusted ROM Range (TROMRNG-1)** This field defines the address range that belongs to Trusted ROM and can be modified only inside Trusted ROM range. Refer to Table 3-4. Trusted ROM Range on page 8 for the detail.
0	-	-	**Reserved**

6.3.4.15 EC-Indirect Memory Address Register 0 (ECINDAR0)

Address Offset: 3Bh

Bit	R/W	Default	Description
7-0	R/W	00h	**EC-Indirect Memory Address (ECINDA7-0)** Define the EC-Indirect memory address when asserting a read/write cycle to EC-Indirect Memory Data Register (ECINDDR).

6.3.4.16 EC-Indirect Memory Address Register 1 (ECINDAR1)

Address Offset: 3Ch

Bit	R/W	Default	Description
7-0	R/W	00h	**EC-Indirect Memory Address (ECINDA15-8)** Define the EC-Indirect memory address when asserting a read/write cycle to EC-Indirect Memory Data Register (ECINDDR).

6.3.4.17 EC-Indirect Memory Address Register 2 (ECINDAR2)

Address Offset: 3Dh

Bit	R/W	Default	Description
7-0	R/W	00h	**EC-Indirect Memory Address (ECINDA23-16)** Define the EC-Indirect memory address when asserting a read/write cycle to EC-Indirect Memory Data Register (ECINDDR).

6.3.4.18 EC-Indirect Memory Address Register 3 (ECINDAR3)

Address Offset: 3Eh

Bit	R/W	Default	Description
7-4	R	LPC/FWH flash: 1111b Otherwise: 0000b	**EC-Indirect Memory Address (ECINDA31-28)** Read only.
3-0	R/W	0h	**EC-Indirect Memory Address (ECINDA27-24)** Define the EC-Indirect memory address when asserting a read/write cycle to EC-Indirect Memory Data Register (ECINDDR).

6.3.4.19 EC-Indirect Memory Data Register (ECINDDR)

Address Offset: 3Fh

Bit	R/W	Default	Description
7-0	R/W	-	**EC-Indirect Memory Data (ECINDD7-0)** Read/Write to this register will access one byte on the flash with the 32-bit flash address defined in ECINDAR3-0.

6.3.4.20 Scratch SRAM 0 Address Low Byte Register (SCAR0L)

Address Offset: 40h

Bit	R/W	Default	Description
7-0	R/W	00h	**Scratch SRAM 0 Address (SC0A7-0)**

6.3.4.21 Scratch SRAM 0 Address Middle Byte Register (SCAR0M)

Address Offset: 41h

Bit	R/W	Default	Description
7-0	R/W	00h	**Scratch SRAM 0 Address (SC0A15-8)**

6.3.4.22 Scratch SRAM 0 Address High Byte Register (SCAR0H)

Address Offset: 42h

Bit	R/W	Default	Description
7	R/W	0b	**Next Start DMA (NSDMA)** If 1 is written to this bit, DMA will be started at the next writing.
6	R/W	0b	**Trust Flag (TRSF)** This bit indicates that Scratch RAM No. 0 can be only accessed by code inside Trusted ROM range.
5-2	R/W	0h	**Reserved**
1-0	R/W	11b	**Scratch SRAM 0 Address (SC0A17-16)** The default value makes this scratch SRAM not be a scratch ROM.

6.3.4.23 Scratch SRAM 1 Address Low Byte Register (SCAR1L)

Address Offset: 43h

Bit	R/W	Default	Description
7-0	R/W	00h	**Scratch SRAM 1 Address (SC1A7-0)**

6.3.4.24 Scratch SRAM 1 Address Middle Byte Register (SCAR1M)

Address Offset: 44h

Bit	R/W	Default	Description
7-0	R/W	00h	**Scratch SRAM 1 Address (SC1A15-8)**

6.3.4.25 Scratch SRAM 1 Address High Byte Register (SCAR1H)

Address Offset: 45h

Bit	R/W	Default	Description
7	R/W	0b	**Next Start DMA (NSDMA)** If 1 is written to this bit, DMA will be started at the next writing.
6	R/W	0b	**Trust Flag (TRSF)** This bit indicates that Scratch RAM No.1 can be only accessed by code inside Trusted ROM range.
5-2	R/W	0h	**Reserved**
1-0	R/W	11b	**Scratch SRAM 1 Address (SC2A17-16)** The default value makes this scratch SRAM not be a scratch ROM.

6.3.4.26 Scratch SRAM 2 Address Low Byte Register (SCAR2L)

Address Offset: 46h

Bit	R/W	Default	Description
7-0	R/W	00h	**Scratch SRAM 2 Address (SC2A7-0)**

6.3.4.27 Scratch SRAM 2 Address Middle Byte Register (SCAR2M)

Address Offset: 47h

Bit	R/W	Default	Description
7-0	R/W	00h	**Scratch SRAM 2 Address (SC2A15-8)**

6.3.4.28 Scratch SRAM 2 Address High Byte Register (SCAR2H)

Address Offset: 48h

Bit	R/W	Default	Description
7	R/W	0b	**Next Start DMA (NSDMA)** If 1 is written to this bit, DMA will be started at the next writing.
6	R/W	0b	**Trust Flag (TRSF)** This bit indicates that Scratch RAM No.2 can be only accessed by code inside Trusted ROM range.
5-2	R/W	0h	**Reserved**
1-0	R/W	11b	**Scratch SRAM 2 Address (SC2A17-16)** The default value makes this scratch SRAM not be a scratch ROM.

6.3.4.29 Scratch SRAM 3 Address Low Byte Register (SCAR3L)

Address Offset: 49h

Bit	R/W	Default	Description
7-0	R/W	00h	**Scratch SRAM 3 Address (SC3A7-0)**

6.3.4.30 Scratch SRAM 3 Address Middle Byte Register (SCAR3M)

Address Offset: 4Ah

Bit	R/W	Default	Description
7-0	R/W	00h	**Scratch SRAM 3 Address (SC3A15-8)**

6.3.4.31 Scratch SRAM 3 Address High Byte Register (SCAR3H)

Address Offset: 4Bh

Bit	R/W	Default	Description
7	R/W	0b	**Next Start DMA (NSDMA)** If 1 is written to this bit, DMA will be started at the next writing.
6	R/W	0b	**Trust Flag (TRSF)** This bit indicates that Scratch RAM No. 3 can be only accessed by code inside Trusted ROM range.
5-2	R/W	0h	**Reserved**
1-0	R/W	11b	**Scratch SRAM 3 Address (SC3A17-16)** The default value makes this scratch SRAM not be a scratch ROM.

6.3.4.32 Scratch SRAM 4 Address Low Byte Register (SCAR4L)

Address Offset: 4Ch

Bit	R/W	Default	Description
7-0	R/W	00h	**Scratch SRAM 4 Address (SC4A7-0)**

6.3.4.33 Scratch SRAM 4 Address Middle Byte Register (SCAR4M)

Address Offset: 4Dh

Bit	R/W	Default	Description
7-0	R/W	00h	**Scratch SRAM 4 Address (SC4A15-8)**

6.3.4.34 Scratch SRAM 4 Address High Byte Register (SCAR4H)

Address Offset: 4Eh

Bit	R/W	Default	Description
7	R/W	0b	**Next Start DMA (NSDMA)** If 1 is written to this bit, DMA will be started at the next writing.
6	R/W	0b	**Trust Flag (TRSF)** This bit indicates that Scratch RAM No. 4 can be only accessed by code inside Trusted ROM range.
5-2	R/W	0h	**Reserved**
1-0	R/W	11b	**Scratch SRAM 4 Address (SC4A17-16)** The default value makes this scratch SRAM not be a scratch ROM.

6.3.5 Host Interface Registers

The registers of SMFI can be divided into two parts: Host Interface Registers and EC Interface Registers and this section lists the host interface. The host interface registers can only be accessed by the host processor. The SMFI resides at LPC I/O space and the base address can be configured through LPC PNPCFG registers. The SMFI logical device number is 0Fh (LDN=0Fh).
These registers are listed below

Table 6-16. Host View Register Map, SMFI

7	0	Offset
Shared Memory Indirect Memory Address (SMIMAR0-3)		00h-03H
Shared Memory Indirect Memory Data (SMIMDR)		04h
Shared Memory Host Semaphore (SMHSR)		0Ch
M-Bus Control Register (MBCTRL)		0Fh

6.3.5.1 Shared Memory Indirect Memory Address Register 0 (SMIMAR0)

The following set of registers is accessible only by the host. The registers are applied to VCC.
This register defines the addresses 7-0 for a read or write transaction to the memory.

Address Offset: 00h

Bit	R/W	Default	Description
7-0	R/W	-	**Indirect Memory Address (IMADR7-0)**

6.3.5.2 Shared Memory Indirect Memory Address Register 1 (SMIMAR1)

This register defines the addresses 15-8 for a read or write transaction to the memory.

Address Offset: 01h

Bit	R/W	Default	Description
7-0	R/W	-	**Indirect Memory Address (IMADR15-8)**

6.3.5.3 Shared Memory Indirect Memory Address Register 2 (SMIMAR2)

This register defines the addresses 23-16 for a read or write transaction to the memory.

Address Offset: 02h

Bit	R/W	Default	Description
7-0	R/W	-	**Indirect Memory Address (IMADR23-16)**

6.3.5.4 Shared Memory Indirect Memory Address Register 3 (SMIMAR3)

This register defines the addresses 31-24 for a read or write transaction to the memory.

Address Offset: 03h

Bit	R/W	Default	Description
7-0	R/W	-	**Indirect Memory Address (IMADR31-24)**

6.3.5.5 Shared Memory Indirect Memory Data Register (SMIMDR)

This register defines the Data bits 7-0 for a read or write transaction to the memory.

Address Offset: 04h

Bit	R/W	Default	Description
7-0	R/W	-	**Indirect Memory Data (IMDA7-0)**

6.3.5.6 Shared Memory Host Semaphore Register (SMHSR)

This register provides eight semaphore bits between the EC and the host. Bits 3-0 may be set by the host and Bits 7-4 may be set by the EC. The register reset on host domain hardware reset.
This is the register the same as the one in section 6.3.4.12 on page 75 but they are in different views.

Address Offset: 0Ch

Bit	R/W	Default	Description
7-4	R	0h	**EC Semaphore (CSEM3-0)** Four bits that may be updated by the EC and read by both the host and the EC.
3-0	R/W	0b	**Host Semaphore (HSEM3-0)** Four bits that may be updated by the host and read by both the host and the EC.

6.3.5.7 M-Bus Control Register (MBCTRL)

Address Offset: 0Fh

Bit	R/W	Default	Description
7-1	-	-	**Reserved**
3-0	R/W	0b	**Slow PCI Clock Register (SLWPCI)** 1: Host PCI clock is less than 33MHz. 0: otherwise It has the same affection as SHBR bit in HCTRL2R register in EC side.

This page is intentionally left blank.

6.4 System Wake-Up Control (SWUC)

6.4.1 Overview

SWUC detects wakeup events and generate SCI#, SMI# and PWUREQ# signals to the host side, or alert EC by interrupts to WUC.

6.4.2 Features

- Supports programmable wake-up events source from the host controlled modules.
- Generates SMI# or PWUREQ# interrupt to host to wake-up system.

6.4.3 Functional Description

The wakeup event and gathering scheme is shown in Figure 6-5. Wakeup Event and Gathering Scheme on page 83.

Figure 6-5. Wakeup Event and Gathering Scheme

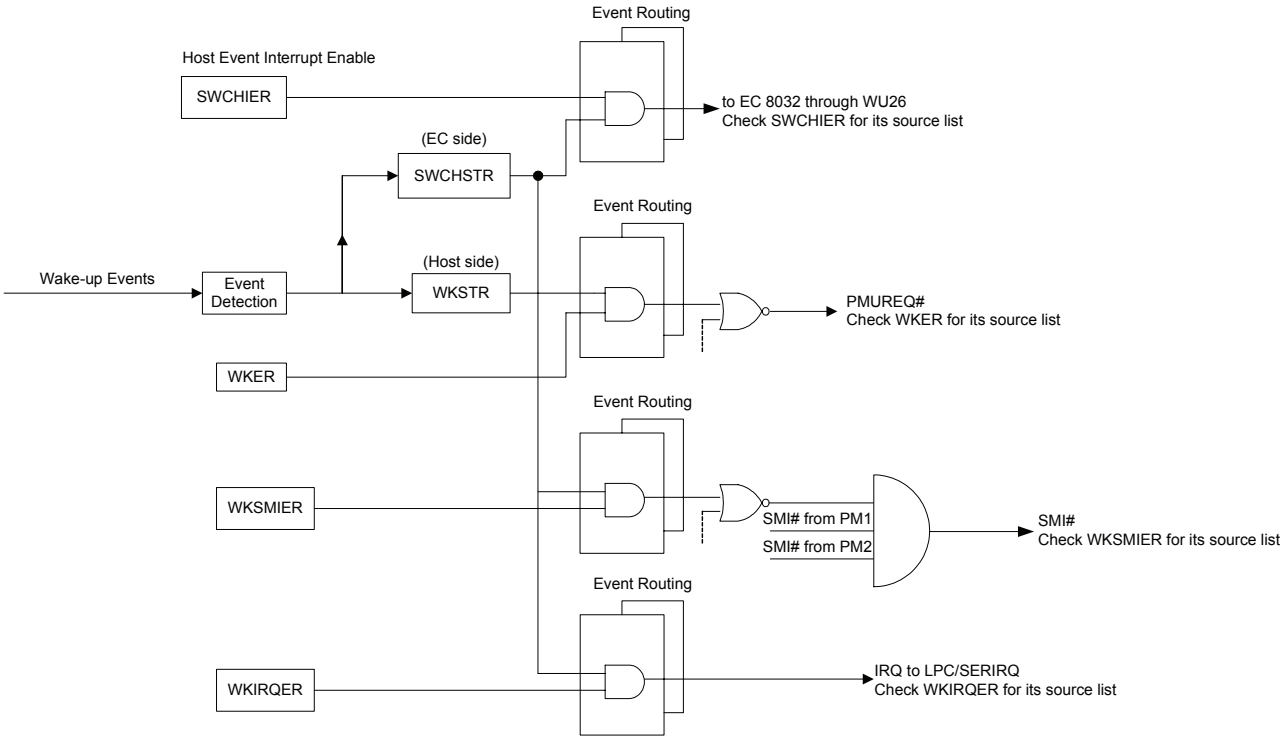

6.4.3.1 Wake-Up Status

When the wake up event is detected, the relative status bit is set to 1 in both host and EC status registers, no matter whether any event enable bits are set or not. A status bit is cleared by writing 1 to it. Writing 0 to a status bit does not change its value. Clearing the event enable bit does not affect the status bit, but prevents it from issuing an event to output. The host uses a mask register (WKSMIER) to decide what the status bits will respond to.

6.4.3.2 Wake-Up Events

When a wake up event is detected, it is recorded on a status bit in WKSTR (host view) register and SWCHSTR register (EC view), regardless of the enabled bit. Each event behavior is determined by a wake up control logic controlled by a set of dedicated registers.

Input events are detected by the SWUC shown as follows:
- Module IRQ Wake up Event
- Modem Ring (RI1 and RI2)
- Telephone Ring (RING input)
- Software event
- Legacy off event
- ACPI state change Event

Module IRQ Wake-Up Event
A module IRQ wake-up event from each logical device is asserted when the leading edge of the module IRQ is detected.
The relative enable bit (WKIRQEN) must be set to 1 to enable and trigger a wake-up event. Refer to the IRQNUM and WKIRQEN fields in IRQNUMX register. When the event is detected, MIRQ bit in WKSTR register is set to 1. If MIRQE in WKER register is also set to 1, the PWUREQ# output is still asserted and until the status bit is cleared.

Modem Ring
If transitions form high to low on RI1# (or RI2#) is detected on the Serial Port 1 (or Serial Port 2) connected to a modem, and then when the signal goes high on RI1#(or RI2#), it will cause a ring wake-up event asserted if the RI1#(or RI2#) event enable bit is set 1 in the WKER register (bit0 for RI1#, and bit1 for RI2#).

Telephone Ring
If transitions form high to low on the Ring input pin, and then when the signal goes high on Ring input pin. It will cause a ring wake-up event asserted when the ring event enable bit is set 1 in the WKER register (BIT3).

Software Event
This bit may trigger a wake event by software control. When the SIRQS (Software IRQ Event Status bit) in WKSTR register is set, a software event to the host is active. When the SIRQS bit in SWCHSTR register is set, a software event to the EC is active. The software event may be activated by the EC via access to the Host Controlled Module bridge regardless of the VCC status.
The SIRQS bit in SWCHSTR may be set when the respective bit toggles in WKSTR from 0 to 1 and when HSECM=0 is in SWCTL1 register. When HSECM =1 t, the SIRQS bit in SWCHSTR is set on a write of a 1 to the respective bit in WKSTR. The SIRQS bit in SWCHSTR is cleared by writing 1 to it.

Legacy Off Events
The host supports either legacy or ACPI mode. The operation mode is assigned on PWRBTN bit in the Super I/O Power Mode Register (SIOPWR). When EISCRDPBM bit in SWCIER register is set, any change in this bit will generate an interrupt to the EC. The EC may read this bit, using SCRDPBM bit in SWCTL2 register, to determine the other power state. In the legacy mode, the PWRSLY bit in SIOPWR register represents a turn power off request. When this bit is set and SCRDPSO bit in SWCTL2 register is set, an interrupt is generated to EC if EISCRDPSO bit in SWCIER register is also set.

ACPI State Change Events
The bits (S1-S5) in WKACPIR register are used to provide a set of ‘system power state change request’. The host uses these bits to issue an ACPI state change request. A write of 1 to any of these bits represents a state change request to the EC, the request may be also read out in SWCTL2 register even S0 is represented when all bits in WKACPI is cleared to 0. When any of S0-S5 bits in SWCTL2 is set and the respective mask bit in SWCIER register is set, an interrupt is generated to EC. All interrupt outputs may be cleared either writing 1 to the status bit or clearing the masking interrupt enable register.

6.4.3.3 Wake-Up Output Events

The SWUC output four types of wake up events:

IRQ Interrupt through SERIRQ to host side, which is activated by SWUC logical device of PNPCFG.
PWUREQ# Routing as an SCI event.
SMI# Routing as an SMI event.
WU26 An interrupt to the WUC module in the EC domain which is handled by EC firmware.

Output events are generated to host when their status bit is set (1 in WKSTR). Output event to the EC through the WUC is generated when their EC status bit is set (1 in SWCHSTR). The host can program three Event Routing Control registers (WKSTR, WKSMIER and WKIRQER) to handle each of the host events to be asserted. This allows selective routing of these events output to PWUREQ#, SMI# and/or SWUC interrupt request (IRQ). After an output event is asserted, it can be cleared either by clearing its status bit or being masked. The current status of the event may be read out at the Wake-Up Event Status Register(WKSTR), and Wake-Up Signals Monitor Register (WKSMR). The SWUC also handles the wake up event coming from the PMC 1 and 2 for SMI# event. In the EC domain, Wake-Up Event Interrupt Enable register (SWCHIER) holds an enable bit to allow selective routing of the event to output the EC wake-up interrupt (WU26) to the WUC.

6.4.3.4 Other SWUC Controlled Options

Additionally, the SWUC handles the following system control signals:
Host Keyboard Reset (KBRST#)
GA20 Signal
Host Configuration Address Option

- **Host Keyboard Reset (KBRST#)**

The Host Keyboard Reset output (KBRST#) can be asserted either by software or hardware:
Software: KBRST# will be asserted when the EC firmware issues a reset command by writing 1 to HRST in SWCTL1 register. Clear this bit to de-assert the KBRST#.
Hardware: KBRST# will be asserted during VSTBY Power-Up reset if HRAPU bit in SWCTL3 register is set and an LPC transaction is started.

The KBRST# signal will be active in the following conditions:
(1) HRSTA bit in the SWUC is enabled and LPC cycle is active when the VSTBY is power-on.
(2) LPCPF bit in the SWUC is enabled and LPCPD# signal is active.
(3) HRST bit in the SWUC is enabled.
(4) Bit 0 of KBHIKDOR in the KBC is enabled if KRSTGA20R is set.

The KBRST# output scheme is shown in Figure 6-6 on page 85.
Note it is another way to use GPIO output function to send KBRST# signal.

Figure 6-6. KBRST# Output Scheme

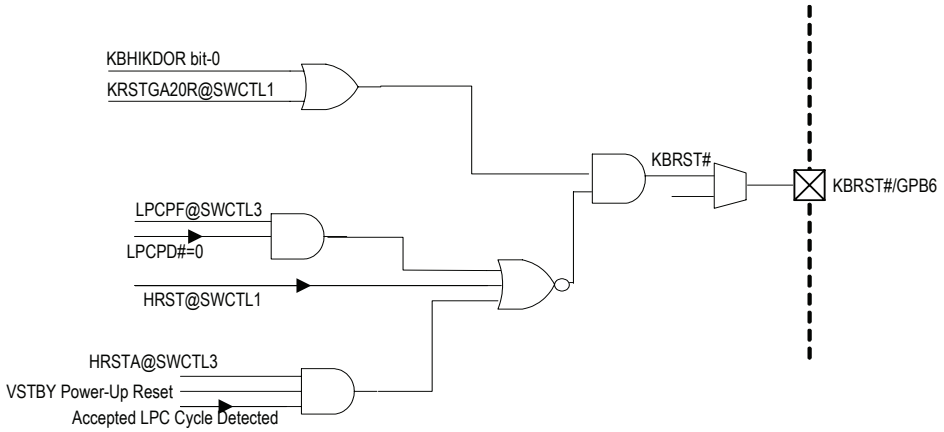

- **GA20 Signal**

In the chip, the GA20 is connected to a GPIO signal that is configured as output. Port GPB5 is recommended to be used as GA20 since its initial state is output driving high.
EC can assert the GA20 signal state by
1. modifying GPB5 in GPIO register
2. writing 1 to LPCPF in SWCTL3 register and GA20 signal will be asserted while LPCPD# signal is active.

The GA20 signal will be active in the following conditions:
(1) LPCPF bit in the SWUC is enabled and LPCPD# signal is active.
(2) Bit-1 of KBHIKDOR in the KBC is enabled if KRSTGA20R is set.

The GA20 output scheme is shown in Figure 6-7 on page 86.
Note it is another way to use GPIO output function to send GA20 signal.

Figure 6-7. GA20 Output Scheme

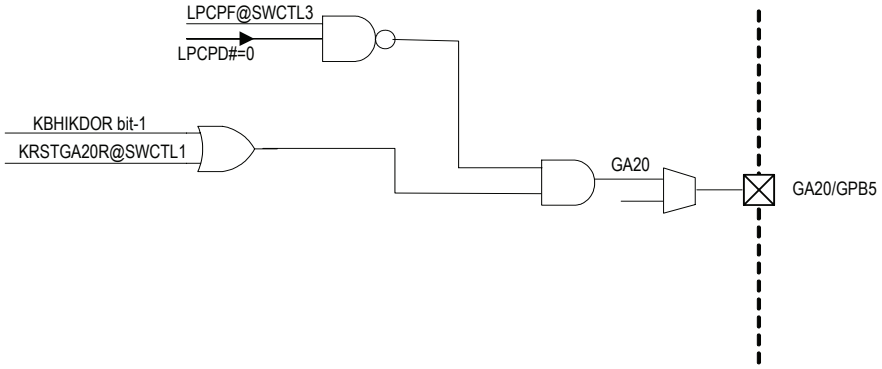

- **Host Configuration Address Option**

The contents of SWCBAHR and SWCBALR change only during VSTBY Power -Up reset. To update the base address of the PNPCFG registers, refer to the followings:
1. Clear HCAV bit in SWCTL1 register by writing 1 to it.
2. Write the lower byte of the address to SWCBALR (LSB must be cleared).
3. Write the higher byte of the address to SWCBAHR.
4. Set HCAL bit to prevent the unintended change in the SWCBALR and SWCBAHR register.

6.4.4 Host Interface Registers

The registers of SWUC can be divided into two parts: Host Interface Registers and EC Interface Registers and this section lists the host interface. The host interface registers can only be accessed by the host processor. SWUC resides at LPC I/O space and the base address can be configured through LPC PNPCFG registers. The SWUC logical device number is 04h (LDN=04h).
SWUC host interface registers are battery-backed. These registers are listed below.

Table 6-17. Host View Register Map, SWUC

7	0	Offset
Wake-Up Event Status Register (WKSTR)		00h
Wake-Up Enable Register (WKER)		02h
Wake-Up Signals Monitor Register (WKSMR)		06h
Wake-Up ACPI Status Register (WKACPIR)		07h
Wake-Up SMI Enable Register (WKSMIER)		13h
Wake-Up Interrupt Enable Register (WKIRQER)		15h

6.4.4.1 Wake-Up Event Status Register (WKSTR)

The register is used to monitor the status of wake-up events. The register will be cleared when the VSTBY power is power-up, or the host domain software reset occurs.

Address Offset: 00h

Bit	R/W	Default	Description
7	R/WC	0	**Module IRQ Event Status (MIRQS)** 0: Event is not active. 1: Event is active.
6	R/WC	0	**Software IRQ Event Status (SIRQS)** The function of this bit can be changed by programming the HSECM bit in SWUC Control Status Register (SWCTL1). When HSECM=0 and writing 1 to this bit, the value of this bit will be inverted. When HSECM=1 and writing 1 to this bit, the bit is set to 1. The bit will be cleared when the SIRQS bit in SWUC Host Event Status Register (SWCHSTR) is written to 1. 0: Event is not active. 1: Event is active.
5-4	R	00	**Reserved.**
3	R/WC	0	**RING# Event Status (RINGS)** If the RING detection mode is disabled, the bit is always 0. 0: Event is not active. 1: Event is active.
2	R	00	**Reserved**
1	R/WC	0	**RI2# Event Status (RI2S)** 0: Event is not active. 1: Event is active.
0	R/WC	0	**RI1# Event Status (RI1S)** 0: Event is not active. 1: Event is active.

6.4.4.2 Wake-Up Event Enable Register (WKER)

The register is used to enable the individual wake-up events to generate PWUREQ# interrupt. The register will be cleared when the VSTBY power is power-up, or the host domain software reset occurs.

Address Offset: 02h

Bit	R/W	Default	Description
7	R/W	0	**Module IRQ Event Enable (MIRQE)** 0: Disable. 1: Enable.
6	R/W	0	**Software IRQ Event Enable (SIRQE)** 0: Disable. 1: Enable.
5-4	R	00	**Reserved**
3	R/W	0	**RING# Event Enable (RINGE)** 0: Disable. 1: Enable.
2	R	00	**Reserved**
1	R/W	0	**RI2# Event Enable (RI2E)** 0: Disable. 1: Enable.
0	R/W	0	**RI1# Event Enable (RI1E)** 0: Disable. 1: Enable.

6.4.4.3 Wake-Up Signals Monitor Register (WKSMR)

The register is used to monitor the value of the SMI# and PWUREQ# signals and identify the generated source. This register is a read-only register.

Address Offset: 06h

Bit	R/W	Default	Description
7-6	R	00	**Reserved**
5	R	0	**PWUREQ# Output from SWUC (PWUREQOS)** 0: PWUREQ# output from SWUC is low. 1: PWUREQ# output from SWUC is high.
4	R	0	**PWUREQ# Signal Status (PWUREQS)** 0: PWUREQ# signal is low. 1: PWUREQ# signal is high.
3	R	0	**SMI# Output from PM2 (PM2SMI)** 0: SMI# output from PM channel 2 is low. 1: SMI# output from PM channel 2 is high.
2	R	0	**SMI# Output from PM1 (PM1SMI)** 0: SMI# output from PM channel 1 is low. 1: SMI# output from PM channel 1 is high.
1	R	0	**SMI# Output from SWUC (SWCSMI)** 0: SMI# output from SWUC is low. 1: SMI# output from SWUC is high.
0	R	0	**SMI# Signal Status (SMIS)** 0: SMI# signal is low. 1: SMI# signal is high.

6.4.4.4 Wake-Up ACPI Status Register (WKACPIR)

The register is used to monitor the status of ACPI. When this register is read, its value always returns 00h.

Address Offset: 07h

Bit	R/W	Default	Description
7-6	R	00	**Reserved**
5	R/W	0	**Change to S5 State (S5)** The host uses this bit to request the EC to change the ACPI S5 state. 0: Not request to change S5 state. 1: Request to change S5 state.
4	R/W	0	**Change to S4 State (S4)** The host uses this bit to request the EC to change the ACPI S4 state. 0: Not request to change S4 state. 1: Request to change S4 state.
3	R/W	0	**Change to S3 State (S3)** The host uses this bit to request the EC to change the ACPI S3 state. 0: Not request to change S3 state. 1: Request to change S3 state.
2	R/W	0	**Change to S2 State (S2)** The host uses this bit to request the EC to change the ACPI S2 state. 0: Not request to change S2 state. 1: Request to change S2 state.
1	R/W	0	**Change to S1 State (S1)** The host uses this bit to request the EC to change the ACPI S1 state. 0: Not request to change S1 state. 1: Request to change S1 state.
0	R	0	**Reserved**

6.4.4.5 Wake-Up SMI Enable Register (WKSMIER)

The register is used to enable the individual wake-up events to generate SMI# interrupt. The register will be cleared when the VSTBY power is power-up, or the host domain software reset occurs.

Address Offset: 13h

Bit	R/W	Default	Description
7	R/W	0	**Reserved**
6	R/W	0	**Software IRQ Event to SMI Enable (SSMIE)** 0: Disable. 1: Enable.
5-4	R	00	**Reserved**
3	R/W	0	**RING# Event to SMI Enable (RINGSMIE)** 0: Disable. 1: Enable.
2	R	00	**Reserved**
1	R/W	0	**RI2# Event to SMI Enable (RI2SMIE)** 0: Disable. 1: Enable.
0	R/W	0	**RI1# Event to SMI Enable (RI1SMIE)** 0: Disable. 1: Enable.

6.4.4.6 Wake-Up IRQ Enable Register (WKIRQER)

The register is used to enable the individual wake-up events to generate the interrupt signal that is assigned by SWUC. The register will be cleared when the VSTBY power is power-up, or the host domain software reset occurs.

Address Offset: 15h

Bit	R/W	Default	Description
7	R/W	0	**Reserved**
6	R/W	0	**Software IRQ Event to IRQ Enable (SIRQE)** 0: Disable. 1: Enable.
5-4	R	00	**Reserved**
3	R/W	0	**RING# Event to IRQ Enable (RINGIRQE)** 0: Disable. 1: Enable.
2	R	00	**Reserved**
1	R/W	0	**RI2# Event to IRQ Enable (RI2IRQE)** 0: Disable. 1: Enable.
0	R/W	0	**RI1# Event to IRQ Enable (RI1IRQE)** 0: Disable. 1: Enable.

6.4.5 EC Interface Registers

The registers of SWUC can be divided into two parts, Host Interface Registers and EC Interface Registers. This section lists the EC interface. The EC interface can only be accessed by the internal 8032 processor. The base address for SWUC is 1400h.
These registers are listed below.

Table 6-18. EC View Register Map, SWUC

7 … 0	Offset
SWUC Control Status 1 Register (SWCTL1)	00h
SWUC Control Status 2 Register (SWCTL2)	02h
SWUC Control Status 3 Register (SWCTL3)	04h
SWUC Host Configuration Base Address Low Byte Register (SWCBALR)	08h
SWUC Host Configuration Base Address High Byte Register (SWCBAHR)	0Ah
SWUC Interrupt Enable Register (SWCIER)	0Ch
SWUC Host Event Status Register (SWCHSTR)	0Eh
SWUC Host Event Interrupt Enable Register (SWCHIER)	10h

6.4.5.1 SWUC Control Status 1 Register (SWCTL1)

The register is used to control the individual wake-up action on SWUC. The register will be cleared when the VSTBY power is power-up. Bit 0 is only cleared when the warm reset occurs.

Address Offset: 00h

Bit	R/W	Default	Description
7	R/W	1	**KB Reset/GA20 Routing (KRSTGA20R)** 0: Enable routing bit-0 of KBHIKDOR as KBRST# source Enable routing bit-1 of KBHIKDOR as GA20 source 1: Disable above
6	R/W	0	**Reserved**
5	R/W	0	**Host Software Event Clear Mode (HSECM)** This bit is used to control the clear mode of SIRQS bit at the Wake-Up Event Status Register (WKSTR).
4	R/W	0	**Host Configuration Address Lock (HCAL)** When the bit is written to 1, the Host Configuration Address and the bit will be locked. The bit is only cleared at the following condition: VSTBY power-up or watchdog reset.
3	R/WC	0	**Host Configuration Address Valid (HCAV)** This bit is set after writing SWCBAHR register. 1: Indicate Host Configuration Base Address stored in SWCBALR and SWCBAHR registers are valid. 0: SWCBALR and SWCBAHR registers are not valid. The bit can be cleared by writing to 1.
2	R	0	**LPC Reset Active (LPCRST)** 0: LPCRST# is inactive. 1: LPCRST# is active.
1	R	-	**VCC Power On (VCCPO)** 0: VCC is power-off. 1: VCC is power-on. See also VCCDO bit in RSTS register in 7.14.4.5 on page 257.
0	R/W	-	**Host Reset Active (HRST)** When this bit is 1, the KBRST# is active to generate one host software reset.

6.4.5.2 SWUC Control Status 2 Register (SWCTL2)

The register is used to control the individual wake-up action on SWUC. The register will be cleared when the VSTBY power is power-up and LPCRST# is active.

Address Offset: 02h

Bit	R/W	Default	Description
7	R/WC	0	**Super I/O Configuration SIOPWR Power Supply Off (SCRDPSO)** The bit is used to monitor the Power Supply Off (PWRSLY) bit in SIOPWR register of PNPCFG. When the bit is written to 1, clear the bit and the interrupt signal caused by the value change in this bit. A write of 0 to this bit is ignored.
6	R/WC	0	**Super I/O Configuration SIOPWR Power Button Mode (SCRDPBM)** The bit is used to monitor the Power Button Mode (PWRBTN) bit in SIOPWR register of PNPCFG. When the bit is written to 1, clear the interrupt signal caused by the value change in this bit. A write of 0 to this bit is ignored.
5-1	R/WC	0000	**ACPI request S5-1 (ACPIRS5-1)** These bits are used to monitor the S5-1 bit at the Wake-Up ACPI Status Register (WKACPIR). When the bit is written to 1, clear the bit and the interrupt signal caused by ACPI. A write of 0 to this bit is ignored.
0	R/WC	0000	**ACPI request S0 (ACPIRS0)** If all S5-1 bits at the WKACPIR are written to 0, the bit will be set to 1. The bit will be cleared if the bit is written to 1.

6.4.5.3 SWUC Control Status 3 Register (SWCTL3)

The register is used to control the individual wake-up action on SWUC. The register will only be cleared when the VSTBY power is power-up.

Address Offset: 04h

Bit	R/W	Default	Description
7-3	R	00h	**Reserved**
2	-	-	**Reserved**
1	R/W	0	**LPC Power Fail Turn Off KBRST# and GA20 (LPCPF)** If the bit is set to 1, the KBRST# and GA20 will be forced to low when the LPCPD# signal is active.
0	R/W	1	**Host Reset Active During VSTBY Power-Up (HRSTA)** If the bit is set to 1, the KBRST# signal will be active when the LPC cycle is active until VSTBY Power-Up Reset is finished. Writing to this bit is ignored if HCAL bit is set.

6.4.5.4 SWUC Host Configuration Base Address Low Byte Register (SWCBALR)

The register is used to program the base address of the SWUC Host Interface registers.
See also Table 6-2 on page 38 and HCAL/HCAV bit in SWCTL1 register.

Address Offset: 08h

Bit	R/W	Default	Description
7-0	R/W	00h	**Base Address Low Byte (BALB)**

6.4.5.5 SWUC Host Configuration Base Address High Byte Register (SWCBAHR)

The register is used to program the base address of the SWUC Host Interface registers.
See also Table 6-2 on page 38 and HCAL/HCAV bit in SWCTL1 register.

Address Offset: 0Ah

Bit	R/W	Default	Description
7-0	R/W	00h	**Base Address High Byte (BAHB)**

6.4.5.6 SWUC Interrupt Enable Register (SWCIER)

The register is used to enable the individual interrupt source on SWUC. The interrupt can be cleared by clearing the status bit or masking the source. On the other hand, the register will be cleared when the warm reset is active.

Address Offset: 0Ch

Bit	R/W	Default	Description
7	R/W	0	**Enable Interrupt from Super I/O Configuration SIOPWR Power Supply Off (EISCRDPSO)** 1: Generate high-level interrupt when the SCRDPSO bit in SWUC Control Status 2 Register (SWCTL2) is changed. 0: Disable the interrupt source.
6	R/W	0	**Enable Interrupt from Super I/O Configuration SIOPWR Power Button Mode (EISCRDPBM)** 1: Generate high-level interrupt when the SCRDPBM bit in SWUC Control Status 2 Register (SWCTL2) is changed. 0: Disable the interrupt source.
5-1	R/W	0000	**Enable Interrupt from ACPI request S5-1 (EIACPIRS5-1)** 1: Generate high-level interrupt when the ACPIRS5-1 bit in SWUC Control Status 2 Register (SWCTL2) is changed. 0: Disable the interrupt source.
0	-	-	**Reserved**

6.4.5.7 SWUC Host Event Status Register (SWCHSTR)

The information of this register is mirror as the Wake-Up Event Status Register (WKSTR). The status bits can be cleared by writing to the corresponding bit in the two registers. The register will be cleared when the VSTBY power is power-up, or the host software reset occurs.

Address Offset: 0Eh

Bit	R/W	Default	Description
7	R/WC	0	**Module IRQ Event Status (MIRQS)** 0: Event is not active. 1: Event is active.
6	R/WC	0	**Software IRQ Event Status (SIRQS)** The function of this bit can be changed by programming HSECM bit in SWUC Control Status Register (SWCTL1). When HSECM=0, this bit is set to 1 when SIRQS toggles to 1 in WKSTR register. When HSECM=1 and this bit is set to 1 while writing 1 to SIRQS in WKSTR register. This bit will be cleared by writing 1 to it. 0: Event is not active. 1: Event is active.
5-4	R	00	**Reserved**
3	R/WC	0	**RING# Event Status (RINGS)** If the RING detection mode is disabled, the bit is always 0. 0: Event is not active. 1: Event is active.
2	R	00	**Reserved**
1	R/WC	0	**RI2# Event Status (RI2S)** 0: Event is not active. 1: Event is active.
0	R/WC	0	**RI1# Event Status (RI1S)** 0: Event is not active. 1: Event is active.

6.4.5.8 SWUC Host Event Interrupt Enable Register (SWCHIER)

The register is used to enable the individual wake-up events to generate one interrupt to the EC 8032 via WU26 of WUC. The register will be cleared when the warm reset occurs.

Address Offset: 10h

Bit	R/W	Default	Description
7	R/W	0	**Module IRQ Event Enable (MIRQEE)** 0: Disable. 1: Enable.
6	R/W	0	**Software IRQ Event Enable (SIRQEE)** 0: Disable. 1: Enable.
5-4	R	00	**Reserved**
3	R/W	0	**RING# Event Enable (RINGEE)** 0: Disable. 1: Enable.
2	R	00	**Reserved**
1	R/W	0	**RI2# Event Enable (RI2EE)** 0: Disable. 1: Enable.
0	R/W	0	**RI1# Event Enable (RI1EE)** 0: Disable. 1: Enable.

6.5 Keyboard Controller (KBC)

6.5.1 Overview

This Keyboard Controller supports a standard keyboard and mouse controller interface.

6.5.2 Features

- Compatible with the legacy 8042 interface keyboard controller.
- Supports two standard registers for programming: Command/Data Register and Status Register.
- Automatically generates interrupts to the host side and EC side when the KBC status is changed.

6.5.3 Functional Description

This Keyboard Controller is compatible with the legacy 8042 interface keyboard controller.

Figure 6-8. KBC Host Interface Block Diagram

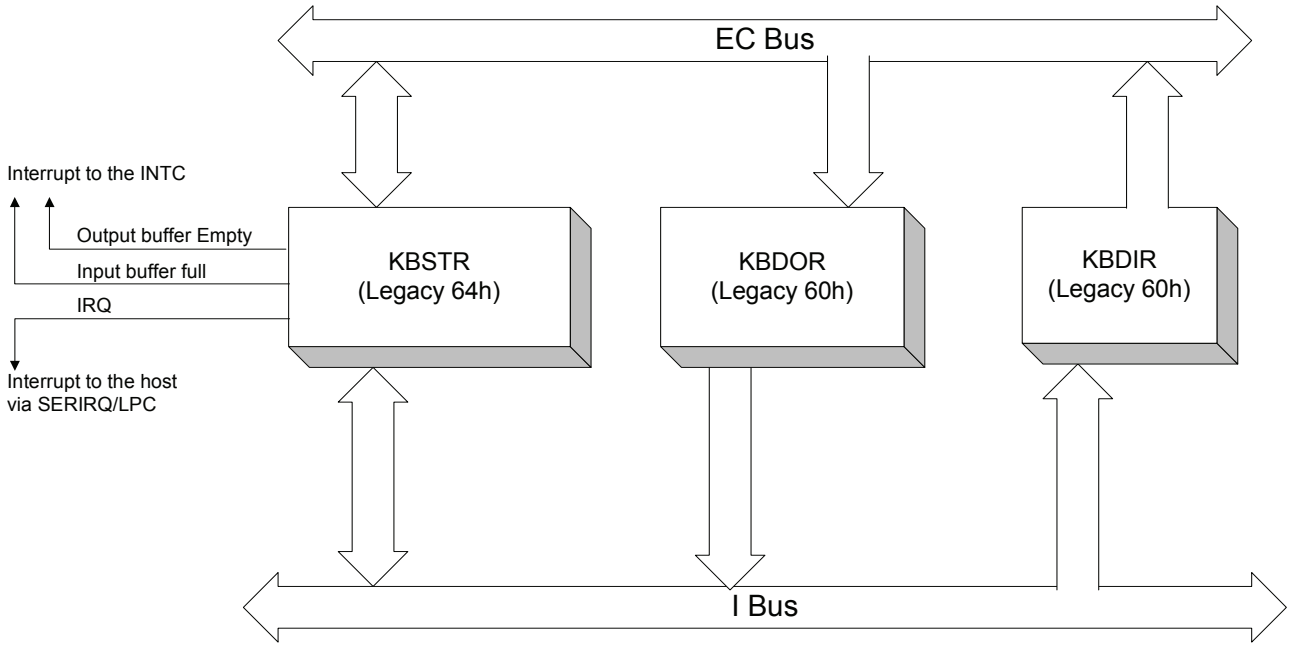

Status
The host processor can read the status of KBC from the KBC Status Register. The internal 8032 can read the status of KBC from the KBC Host Interface Keyboard/Mouse Status Register.

Host Write Data to KBC Interface
When writing to address 60h or 64h (programmable), the IBF bit in the KBC Status Register is set and A2 bit in the KBC Status Register indicates 8032 whose address was written. When writing to address 60h, A2 bit is 0. When writing to address 64h, A2 bit is 1.
EC 8032 can identify that the input buffer is full by either polling IBF bit in the Status register or detecting an interrupt (INT24) if the interrupt is enabled. EC 8032 can read the data from the KBC Host Interface Keyboard/Mouse Data Input Register (KBHIDIR), and the IBF bit in the Status Register is cleared.

EC 8032 Write Data to KBC Interface
EC 8032 can write data to the KBC when it needs to send data to the host. When EC 8032 writes data to the KBC Host Interface Keyboard Data Output Register (KBHIKDOR), the OBF bit in the Status Register is set. If the IRQ1 interrupt is enabled, the IRQ1 will be sent to the host. The host can read the Data Output Register when it detects the Output Buffer Full condition. When EC 8032 writes data to the KBC Host Interface Mouse

Data Output Register (KBHIMDOR), the OBF bit in the Status Register is set. If the IRQ12 interrupt is enabled, the IRQ12 will be sent to the host. The host can read the Data Output Register when it detects the Output Buffer Full condition. When the Output Buffer Empty interrupt to INTC (INT2) is enabled, the interrupt signal is set high if the output buffer is empty.

Interrupts
There are two interrupts (Input Buffer Full Interrupt and Output Buffer Empty) connected to the INTC.
There are two interrupts (IRQ1 and IRQ12) connected to the host side (SERIRQ).
The IRQ numbers of KBC are programmable and use IRQ1 and IRQ12 as abbreviations in this section.

Figure 6-9. IRQ Control in KBC Module

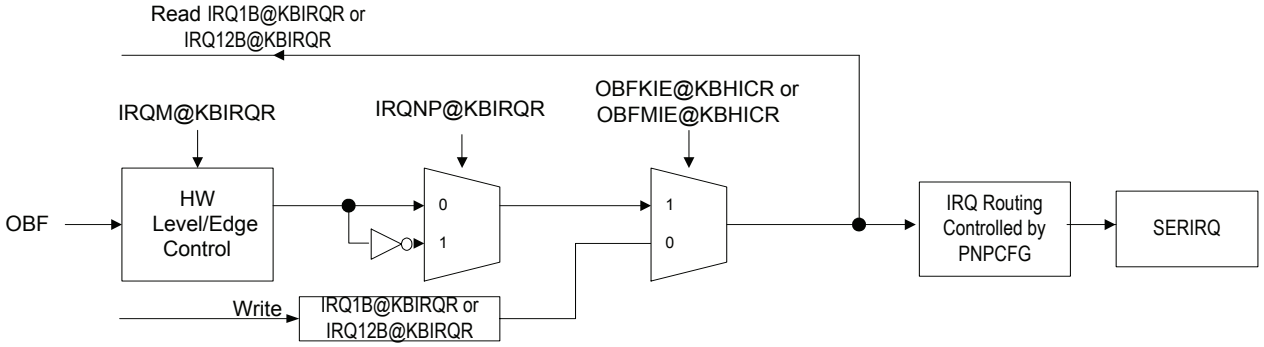

GA20 and KBRST#
Refer to section 6.4.3.4 on page 85.

6.5.4 Host Interface Registers

The registers of KBC can be divided into two parts: Host Interface Registers and EC Interface Registers and this section lists the host interface. The host interface registers can only be accessed by the host processor.
The KBC resides at LPC I/O space and the base address can be configured through LPC PNPCFG registers. The KBC/Keyboard logical device number is 06h (LDN=06h) and the KBC/Mouse logical device number is 05h (LDN=05h). For compatibility issue, the two I/O Port Base Addresses of KBC/Keyboard are suggested to configure at 60h and 64h.

These registers are listed below.

Table 6-19. Host View Register Map, KBC

7 ... 0	Offset
KBC Data Input Register (KBDIR)	Legacy 60h
KBC Data Output Register (KBDOR)	Legacy 60h
KBC Command Register (KBCMDR)	Legacy 64h
KBC Status Register (KBSTR)	Legacy 64h

Legacy 60h represents (I/O Port Base Address 0) + (Offset 0h)
Legacy 64h represents (I/O Port Base Address 1) + (Offset 0h)
See also Table 6-3 on page 38.

6.5.4.1 KBC Data Input Register (KBDIR)

When the host processor is writing this register, the IBF bit in KBC Status Register (KBSTR) will be set and the A2 bit will be cleared. If the IBFCIE bit in KBC Host Interface Control Register (KBHICR) is enabled, the write action will cause one interrupt to 8032 processor via INT24 of INTC.

Address Offset: 00h for I/O Port Base Address 0, Legacy 60h

Bit	R/W	Default	Description
7-0	W	-	**KBC Data Input (KBDI)** The data is used to output for Keyboard/Mouse.

6.5.4.2 KBC Data Output Register (KBDOR)

When the host processor is reading this register, The OBF bit in KBC Status Register (KBSTR) will be cleared. The reading access will also clear the interrupt for host processor when the IRQM bits of KBC Interrupt Control Register (KBIRQR) are programmed to be at level mode. If the OBECIE bit in KBC Host Interface Control Register (KBHICR) is enabled, the read action will cause one interrupt to 8032 processor via INT2 of INTC.

Address Offset: 00h for I/O Port Base Address 0, Legacy 60h

Bit	R/W	Default	Description
7-0	R	-	**KBC Data Output (KBDO)** The data comes from the Keyboard/Mouse source.

6.5.4.3 KBC Command Register (KBCMDR)

When the register is written, the IBF bit in KBC Status Register (KBSTR) will be set and the A2 bit will be set.

Address Offset: 00h for I/O Port Base Address 1, Legacy 64h

Bit	R/W	Default	Description
7-0	W	-	**KBC Command (KBCMD)** The command data is used to output for Keyboard/Mouse.

6.5.4.4 KBC Status Register (KBSTR)

The host processor uses the register to monitor the status of KBC. The same information is similar to the KBC Host Interface Keyboard/Mouse Status Register (KBHISR). It is used by the internal 8032.

Address Offset: 01h for I/O Port Base Address 0, Legacy 64h

Bit	R/W	Default	Description
7-4	R	0h	**Programming Data 3-0 (PD3-0)** The data is used by the 8032 firmware to be the general-purpose setting.
3	R	0	**A2 Address (A2)** The bit is used to keep the A2 address information of the last write operation that the host processor accessed the KBC.
2	R	0	**Programming Data II (PDII)** The function is the same as the PD3-0.
1	R	0	**Input Buffer Full (IBF)** When the host processor is writing data to KBDIR or KBCMDR, the bit is set. On the other hand, the bit will be cleared when the KBDIR or KBCMDR is read by the 8032 firmware.
0	R	0	**Output Buffer Full (OBF)** When the EC 8032 is writing data to KBDOR, the bit is set. On the other hand, the bit will be cleared when the KBDOR is read by the host processor.

6.5.5 EC Interface Registers

The registers of KBC can be divided into two parts, Host Interface Registers and EC Interface Registers. This section lists the EC interface. The EC interface can only be accessed by the internal 8032 processor. The base address for KBC is 1300h.

These registers are listed below

Table 6-20. EC View Register Map, KBC

7 — 0	Offset
KBC Host Interface Control Register (KBHICR)	00h
KBC Interrupt Control Register (KBIRQR)	02h
KBC Host Interface Keyboard/Mouse Status Register (KBHISR)	04h
KBC Host Interface Keyboard Data Output Register (KBHIKDOR)	06h
KBC Host Interface Mouse Data Output Register (KBHIMDOR)	08h
KBC Host Interface Keyboard/Mouse Data Input Register (KBHIDIR)	0Ah

.

6.5.5.1 KBC Host Interface Control Register (KBHICR)

Address Offset: 00h

Bit	R/W	Default	Description
7	R	0	**Reserved**
6	R/W	0	**PM Channel 1 Input Buffer Full 8032 Interrupt Enable (PM1ICIE)** The bit is used to enable the interrupt to 8032 for PM channel 1 when the input buffer is full via INT25 of INTC.
5	R/W	0	**PM Channel 1 Output Buffer Empty 8032 Interrupt Enable (PM1OCIE)** The bit is used to enable the interrupt to 8032 for PM channel 1 when the output buffer is empty via INT3 of INTC.
4	R/W	0	**PM Channel 1 Host Interface Interrupt Enable (PM1HIE)** 0: The IRQ11 is controlled by the IRQ11B bit in KBC Interrupt Control Register (KBIRQR). 1: Enables the interrupt to the host side via SERIRQ for PM channel 1 when the output buffer is full. The interrupt type is controlled by the IRQM and IRQNP bit in KBIRQR.
3	R/W	0	**Input Buffer Full 8032 Interrupt Enable (IBFCIE)** The bit is used to enable the interrupt to 8032 for Keyboard/Mouse when the input buffer is full via INT24 of INTC.
2	R/W	0	**Output Buffer Empty 8032 Interrupt Enable (OBECIE)** The bit is used to enable the interrupt to 8032 for Keyboard/Mouse when the output buffer is empty via INT2 of INTC.
1	R/W	0	**Output Buffer Full Mouse Interrupt Enable (OBFMIE)** 0: The IRQ12 is controlled by the IRQ12B bit in KBIRQR. 1: Enables the interrupt to mouse driver in the host processor via SERIRQ when the output buffer is full. The interrupt type is controlled by the IRQM and IRQNP bit in KBIRQR.
0	R/W	0	**Output Buffer Full Keyboard Interrupt Enable (OBFKIE)** 0: The IRQ1 is controlled by the IRQ1B bit in KBIRQR. 1: Enables the interrupt to mouse driver in the host processor via SERIRQ when the output buffer is full. The interrupt type is controlled by the IRQM and IRQNP bit in KBIRQR.

6.5.5.2 KBC Interrupt Control Register (KBIRQR)

Address Offset: 02h

Bit	R/W	Default	Description
7	R	0	**Reserved**
6	R/W	0	**Interrupt Negative Polarity (IRQNP)** The bit is enabled, and then the interrupt level is inverted.
5-3	R/W	0	**Interrupt Mode (IRQM)** These bits are used to control the interrupt type to be level-triggered or edge-triggered (pulse) mode. In level-triggered mode, the default value of IRQ1/11/12 to SERIRQ via routing logic is low and will be set to high when the interrupt condition occurs. In edge-triggered mode, the default value of IRQ1/11/12 to SERIRQ via routing logic is high and a negative pulse will be generated when the interrupt condition occurs. Note that the polarity definition in edge-triggered is different from SCIPM field in PMCTL register and SMIPM field in PMIC register. 000: Level-triggered mode. 001: Edge-triggered mode with 1-cycle pulse width. 010: Edge-triggered mode with 2-cycle pulse width. 011: Edge-triggered mode with 4-cycle pulse width. 100: Edge-triggered mode with 8-cycle pulse width. 101: Edge-triggered mode with 16-cycle pulse width. Other: reserved.
2	R/W	1	**IRQ11 Control Bit (IRQ11B)** When the PMHIE bit in KBC Host Interface Control Register (KBHICR) is 0, the bit directly controls the IRQ11 signal. The bit can be used to monitor the status of IRQ11 signal.
1	R/W	1	**IRQ12 Control Bit (IRQ12B)** When the OBFMIE bit in KBC Host Interface Control Register (KBHICR) is 0, the bit directly controls the IRQ12 signal. The bit can be used to monitor the status of IRQ12 signal.
0	R/W	1	**IRQ1 Control Bit (IRQ1B)** When the OBFKIE bit in KBC Host Interface Control Register (KBHICR) is 0, the bit directly controls the IRQ1 signal. The bit can be used to monitor the status of IRQ1 signal.

6.5.5.3 KBC Host Interface Keyboard/Mouse Status Register (KBHISR)

The 8032 firmware uses the register to monitor the status of KBC. It can use bit 7-4 and bit 2 to send the information to the host processor. The data of this register is the same as the data of KBC Status Register (KBSTR).

Address Offset: 04h

Bit	R/W	Default	Description
7-4	R/W	0h	**Programming Data 3-0 (PD3-0)** The data is used by the 8032 firmware to be the general-purpose setting.
3	R	0	**A2 Address (A2)** The bit is used to keep the A2 address information of the write operation while the host processor accesses the KBC.
2	R/W	0	**Programming Data II (PDII)** The function is the same as PD3-0.
1	R	0	**Input Buffer Full (IBF)** When the host processor is writing data to KBDIR or KBCMDR, the bit is set. On the other hand, the bit will be cleared when KBHIDIR is read by the 8032 firmware.
0	R	0	**Output Buffer Full (OBF)** When 8032 is writing data to KBHIKDOR and KBHIMDOR, the bit is set. On the other hand, the bit will be cleared when the KBDOR is read by the host.

6.5.5.4 KBC Host Interface Keyboard Data Output Register (KBHIKDOR)

The 8032 firmware can write the register to send the data of the KBC Data Output Register (KBDOR). Besides, the action will set the OBF bit in the KBC Status Register (KBSTR). If the OBECIE bit in the KBC Interrupt Control Register (KBIRQR) is enabled, the action will clear the interrupt.

Address Offset: 06h

Bit	R/W	Default	Description
7-0	W	-	**KBC Keyboard Data Output (KBKDO)** The data output to the KBC Data Output Register (KBDOR).

6.5.5.5 KBC Host Interface Mouse Data Output Register (KBHIMDOR)

The 8032 firmware can write the register to send the data of the KBC Data Output Register (KBDOR). Besides, the action will set the OBF bit in the KBC Status Register (KBSTR). If the OBECIE bit in the KBC Interrupt Control Register (KBIRQR) is enabled, the action will clear the interrupt.

Address Offset: 08h

Bit	R/W	Default	Description
7-0	W	-	**KBC Mouse Data Output (KBKDO)** The data output to the KBC Data Output Register (KBDOR).

6.5.5.6 KBC Host Interface Keyboard/Mouse Data Input Register (KBHIDIR)

The 8032 firmware can read the register to get the data of the KBC Data Input Register (KBDIR). Besides, the action will clear the IBF bit in the KBC Status Register (KBSTR). If the IBFCIE bit in the KBC Interrupt Control Register (KBIRQR) is enabled, the action will clear the interrupt.

Address Offset: 0Ah

Bit	R/W	Default	Description
7-0	R	-	**KBC Keyboard/Mouse Data Input (KBKMDI)** The data is the same as the data of KBC Data Input Register (KBDIR).

6.6 Power Management Channel (PMC)

6.6.1 Overview

The power management channel is defined in ACPI specification and used as a communication channel between the host processor and embedded controller.

6.6.2 Features

- Supports two PM channels
- Supports compatible mode and enhanced mode (both channels)
- Supports shared and private interface
- Supports Command/Status and Data ports
- Supports IRQ/SMI/SCI generation

6.6.3 Functional Description

To generate the SCI and SMI interrupts to the host

6.6.3.1 General Description

The PM channel supports two operation modes: one is called Compatible mode that is available for channel 1 only. The other is called Enhanced mode. PMC is available for both channels. The PM channel provides four registers: PMDIR, PMDOR, PMCMDR and PMSTR for communication between the EC and host side. The PMDIR register can be written to by the host and read by the EC. The PMDOR register can be written to by the EC and read by the host. The PMCMDR/PMSTR register can be read by both the EC and Host side.

The PMC host interface block diagram is shown below.

Figure 6-10. PMC Host Interface Block Diagram

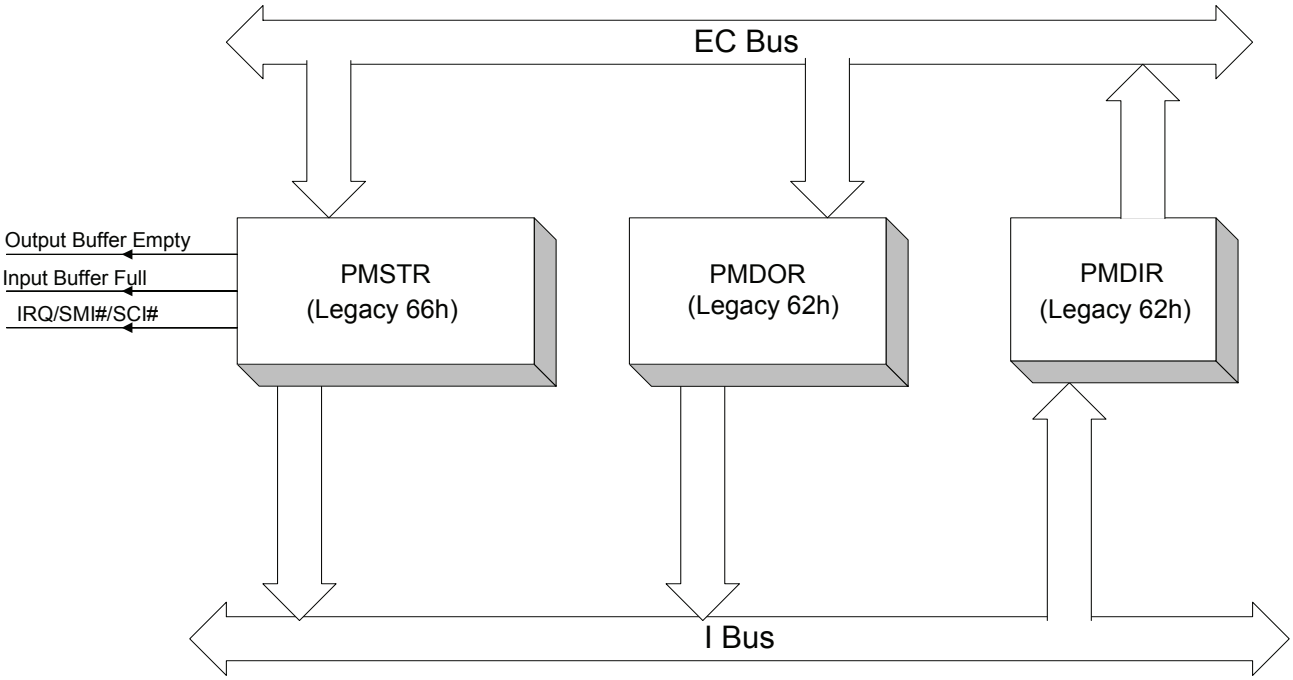

EC Interrupts
Two interrupts (IBF and OBF) are connected to INTC. These interrupts are enabled by OBEIE and IBFIE in PMCTLn register respectively.

The diagram of PMC interrupt to EC 8032 via INT3/INT25 of INTC is shown below.

Figure 6-11. EC Interrupt Request for PMC

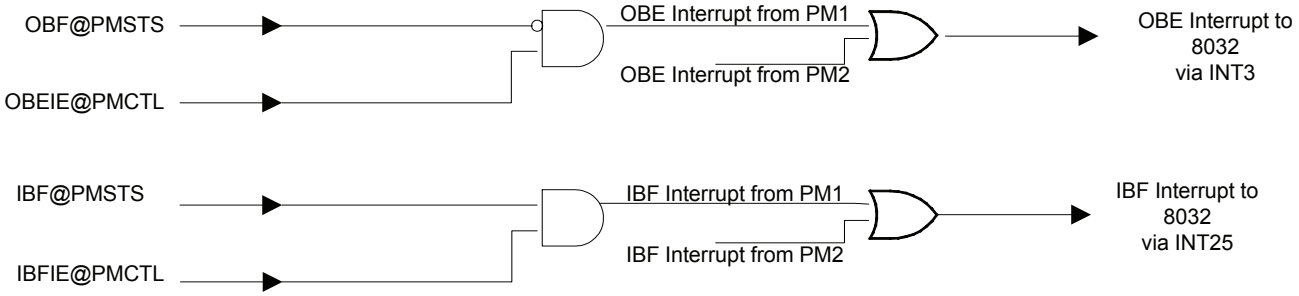

Host Interrupt
The EC can select to access to different address space to generate IRQ, SMI or SCI interrupt when either IBF or OBF is set.

The IRQ numbers of PMC are programmable and use IRQ11 as the abbreviation in the following section. The abbreviation, n, represents channel 1 and/or channel 2 of this register.

6.6.3.2 Compatible Mode

When IRQ numbers in host configuration register are assigned by host software, and the interrupt can be generated either by hardware via PM1HIE in KBHICR register or by programming KBIRQR register. In Normal Polarity mode (IRQNP in KBIRQR register is cleared), IT8512 supports legacy level for PM compatible mode interrupt. When a level interrupt is selected (IRQM in KBIRQR register is cleared), the interrupt signal is asserted when the OBF flag has been set, which is still asserted until the output buffer is read (i.e.,OBF flag is cleared). The EC can control the interrupts generated by the PM channel to the one as follows:
IRQ signal to LPC/SERIRQ, when IRQEN bit in PMIEn register is set.
SMI# output to SWUC, when SMIEN bit in PMIEn register is set.
SCI# signal, using the SCIEC output, when SCIEN bit in PMIEn register is set.

The IRQ/SCI#/SMI# control diagram in PMC compatible mode is shown below.

Figure 6-12. IRQ/SCI#/SMI# Control in PMC Compatible Mode

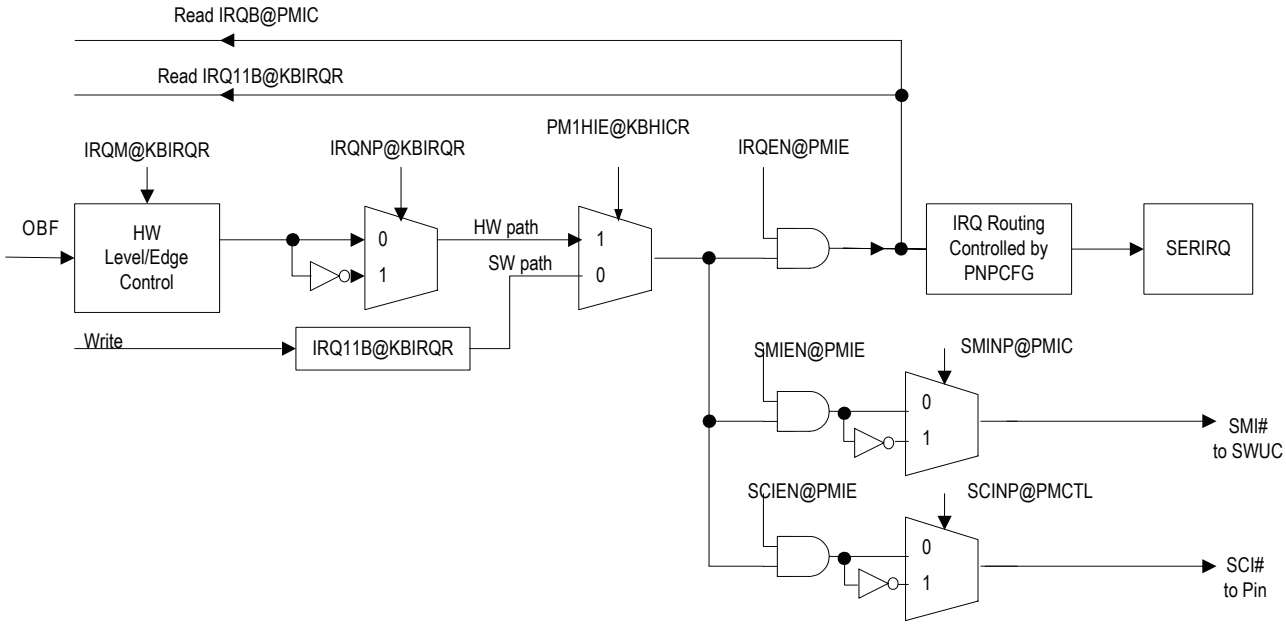

6.6.3.3 Enhanced PM mode

Enhanced PM mode is activated when APM is set to 1 in PMCTLn register. IRQ, SMI or SCI interrupts generated can be selected to output via software control or hardware. Which channel will be output an IRQ is decided by programming IRQEN bit in PMIEn register. SCI and SMI are generated when EC writes to the Data output buffer. SCI is generated when EC reads the Data Input buffer. Different data register generates different interrupt. The OBF flag in PMSTSn register is set and both SMI and SCI interrupts are deasserted when PMDOn register is written into data. The OBF_SMI interrupt is generated when PMDOSMIn register is written into data. The OBF_SMI flag is cleared when OBF flag is cleared. The OBF_SCI interrupt is generated When PMDOSCIn register is written into data.OBF_SCI which is cleared when OBF is cleared.
The IBF flag is cleared and SCI interrupt is generated when PMDISCIn register is read out data. The IBF flag is cleared and SCI interrupt is not asserted when PMDIn register is read out data.

The IRQ/SCI/SMI control diagram in PMC enhanced mode is shown below.

Figure 6-13. IRQ/SCI#/SMI# Control in PMC Enhanced Mode

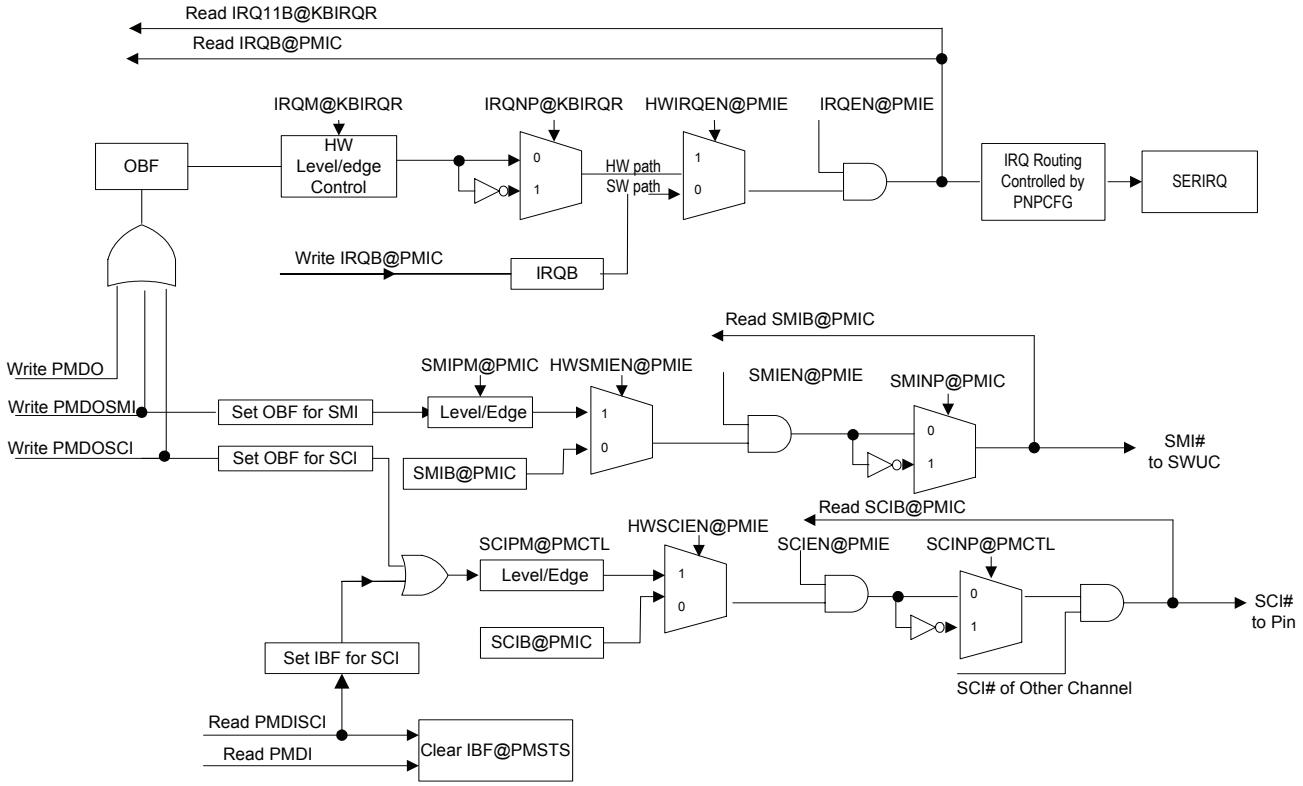

6.6.3.4 PMC2EX

There is a channel 2 extended (PMC2EX) mailbox (MBX) function based on PMC channel 2, which is constructed by a 16-byte mailbox shared with BRAM. See also Figure 7-32. BRAM Mapping Diagram on page 264.

This 16-byte mailbox can be accessed from both the EC side (named MBXEC0-15) and host side (MBXH0-15). In the EC side, MBXEC0-15 is always located in PMC module offset F0h-FFh and shared with the topmost 16-byte in BRAM.
In the host side, MBXH0-15 address is based on the descriptor 2 of Power Management I/F Channel 2 logic device inside LPC I/O space. (Refer to section 6.2.10.6 and 6.2.10.7 on page 56)

The PMC2EX (channel 2 extended) shares the same interrupt generation resource and registers (offset 10h-18h).

For registers, PMC2EX shares the same registers (offset 10h-18h) and has its dedicated MBXCTRL register (offset 19h).

For interrupt generation, PMC2EX shares the same interrupt logic with channel 2. If MBXEN is set, IBF/OBF interrupt source of PMC2EX is ORed with channel 2.

The EC/host side should check whether to get the grant from the internal arbiter after writing to MBXEC0/MBXH0 (respectively).

The typical PMC2EX mailbox operation is described below.

Figure 6-14. Typical PMC2EX Mailbox Operation

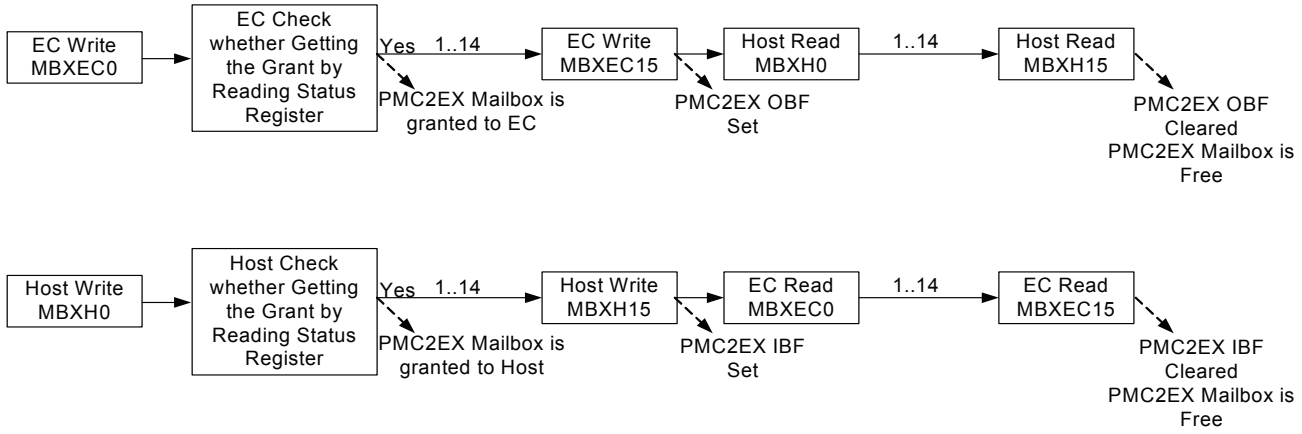

6.6.4 Host Interface Registers

The registers of PMC can be divided into two parts: Host Interface Registers and EC Interface Registers and this section lists the host interface. The host interface registers can only be accessed by the host processor. The PMC Channel 1 and 2 reside at LPC I/O space and the base address can be configured through LPC PNPCFG registers. The channel 1 logical device number is 11h (LDN=11h) and the channel 2 logical device number is 12h (LDN=12h). For compatibility issue, the two I/O Port Base Addresses of channel 1 are suggested to configure at 62h and 66h.

These registers are listed below.

Table 6-21. Host View Register Map, PMC

7	0	Offset
PMC Data Input Register (PMDIR)		Legacy 62h
PMC Data Output Register (PMDOR)		Legacy 62h
PMC Command Register (PMCMDR)		Legacy 66h
PMC Status Register (PMSTR)		Legacy 66h

Legacy 62h represents (I/O Port Base Address 0) + (Offset 0h)
Legacy 66h represents (I/O Port Base Address 1) + (Offset 0h)
See also Table 6-3 on page 38.

6.6.4.1 PMC Data Input Register (PMDIR)

Address Offset: 00h for I/O Port Base Address 0, Legacy 62h for Channel 1

Bit	R/W	Default	Description
7-0	W	0h	**Data Input Register Bit [7:0] (DIRB)** This is the data input register for power management channel data communication between the host and EC side. When the host writes this port, data is written to PMDIR register and EC 8032 can read it. Notice that when the Command/Status register is written, the data is also stored into PMDIR register. Users must read A2 to decide whether the PMDIR data is data or command.

6.6.4.2 PMC Data Output Register (PMDOR)

Address Offset: 00h for I/O Port Base Address 0, Legacy 62h for Channel 1

Bit	R/W	Default	Description
7-0	R	0h	**Data Output Register Bit [7:0] (DORB)** This is the data output register for power management channel data communication between the host and EC. When the host reads this port, data is read from PMDOR register and EC 8032 can write it.

6.6.4.3 PMC Command Register (PMCMDR)

Address Offset: 00h for I/O Port Base Address 1, Legacy 66h for Channel 1

Bit	R/W	Default	Description
7-0	W	0h	**Command Register Bit [7:0] (CRB)** The port is written by the host when A2 = 1 in PMSTR register.

6.6.4.4 Status Register (PMSTR)

Address Offset: 00h for I/O Port Base Address 1, Legacy 66h for Channel 1

Bit	R/W	Default	Description
7-4	R/W	0h	**Status Register (STS)** For channel 1 and channel 2 with MBXEN cleared: This is a general purpose flag used for signaling between the host and EC side. When used as ACPI PM channel, the predefined meaning is burst, SCI event and SMI event. For channel 2 with MBXEN set: Bit 7: IBF of PMC channel 2 extended (PMC2EX) Bit 6: OBF of PMC channel 2 extended (PMC2EX) Bits 5-4: 00b: PMC2EX mailbox is not granted to both sides. 01b: PMC2EX mailbox is granted to the EC side. 10b: PMC2EX mailbox is granted to the host side. 11b: Reserved
3	R	0h	**A2 (A2)** This bit is used to indicate the last write (by host) address bit A2. If the bit is 0, it represents that the data written by the host is data. If this bit is 1, it represents that the data written by the host is command.
2	R/W	0h	**General Purpose flag (GPF)** This bit is used as a general-purpose flag.
1	R	0h	**Input Buffer Full (IBF)** This bit is used to indicate that the PMDIR of the PM channel has been written by the host. This bit is set when the host writes data input register or command register and is cleared when the EC 8032 reads the data input register. Notice that the write to data input register or command register by the host all trigger this flag and EC must use A2 to distinguish whether the write is a command or data.
0	R	0h	**Output Buffer Full (OBF)** This bit is used to indicate that the PMDOR of the PM channel has been written by the EC. This bit is set when EC writes the data output port and is cleared when the host reads the data out buffer.

6.6.5 EC Interface Registers

The registers of PMC can be divided into two parts, Host Interface Registers and EC Interface Registers. This section lists the EC interface. The EC interface can only be accessed by the internal 8032 processor. The base address is 1500h.

These registers are listed below.

Table 6-22. EC View Register Map, PMC

7 — 0	Offset
Host Interface PM Channel 1 Status (PM1STS)	00h
Host Interface PM Channel 1 Data Out Port (PM1DO)	01h
Host Interface PM Channel 1 Data Out Port with SCI (PM1DOSCI)	02h
Host Interface PM Channel 1 Data Out Port with SMI (PM1DOSMI)	03h
Host Interface PM Channel 1 Data In Port (PM1DI)	04h
Host Interface PM Channel 1 Data In Port with SCI (PM1DISCI)	05h
Host Interface PM Channel 1 Control (PM1CTL)	06h
Host Interface PM Channel 1 Interrupt Control (PM1IC)	07h
Host Interface PM Channel 1 Interrupt Enable (PM1IE)	08h
Host Interface PM Channel 2 Status (PM2STS)	10h
Host Interface PM Channel 2 Data Out Port (PM2DO)	11h
Host Interface PM Channel 2 Data Out Port with SCI (PM2DOSCI)	12h
Host Interface PM Channel 2 Data Out Port with SMI (PM2DOSMI)	13h
Host Interface PM Channel 2 Data In Port (PM2DI)	14h
Host Interface PM Channel 2 Data In Port with SCI (PM2DISCI)	15h
Host Interface PM Channel 2 Control (PM2CTL)	16h
Host Interface PM Channel 2 Interrupt Control (PM2IC)	17h
Host Interface PM Channel 2 Interrupt Enable (PM2IE)	18h
Mailbox Control (MBXCTRL)	19h
16-byte PMC2EX Mailbox 0 (MBXEC0)	F0h
…	…
16-byte PMC2EX Mailbox 15 (MBXEC15)	FFh

6.6.5.1 PM Status Register (PMSTS)

This register is the same as the Status register in host side but reside in the EC side.

Address Offset: 00h/10h

Bit	R/W	Default	Description
7-4	R/W	0h	**Status Register (STS)** For channel 1 and channel 2 with MBXEN cleared: This is a general-purpose flag used for signaling between the host and EC. When used as ACPI PM channel, the predefined meaning is burst, SCI event and SMI event. For channel 2 with MBXEN set: Bit 7: IBF of PMC channel 2 extended (PMC2EX) Bit 6: OBF of PMC channel 2 extended (PMC2EX) Bits 5-4: 00b: PMC2EX mailbox is not granted to both sides. 01b: PMC2EX mailbox is granted to the EC side. 10b: PMC2EX mailbox is granted to the host side. 11b: Reserved
3	R	0h	**A2 (A2)** This bit is used to indicate the last write (by host) address bit A2. If the bit is 0, it represents that the data written to the data port is data. If this bit is 1, it represents that the data written to the data port is command.
2	R/W	0h	**General Purpose flag (GPF)** This bit is used as a general-purpose flag.
1	R	0h	**Input Buffer Full (IBF)** This bit is used to indicate that the PMDIR of the PM channel has been written by the host. This bit is set when host write data port or command port and is cleared when the EC read the data in the buffer.
0	R	0h	**Output Buffer Full (OBF)** This bit is used to indicate that the PMDOR of the PM channel has been written by the EC. This bit is set when EC writes data port and is cleared when the host reads the data output buffer.

6.6.5.2 PM Data Out Port (PMDO)

This register is the PMDOR buffer. The data written to this register is stored in PMDOR.

Address Offset: 01h/11h

Bit	R/W	Default	Description
7-0	W	0h	**PM Data Out (PMDO[7:0])** This is the data output buffer.

6.6.5.3 PM Data Out Port with SCI (PMDOSCI)

This register is the PMDOR buffer with SCI. The data written to this register is stored in PMDOR. SCI is generated upon write.

Address Offset: 02h/12h

Bit	R/W	Default	Description
7-0	W	0h	**PM Data Out with SCI (PMDOSCI[7:0])** This is the data output buffer with SCI. Writing to this port will generate hardware SCI if enabled.

6.6.5.4 PM Data Out Port with SMI (PMDOSMI)

This register is the PMDOR buffer with SMI. The data written to this register is stored in PMDOR. SMI is generated upon write.

Address Offset: 03h/13h

Bit	R/W	Default	Description
7-0	W	0h	**PM Data Out with SMI (PMDOSMI[7:0])** This is the data output buffer with SMI. Writing to this port will generate hardware SMI if enabled.

6.6.5.5 PM Data In Port (PMDI)

This register is the PMDIR buffer. Host written data or command is stored in this buffer.

Address Offset: 04h/14h

Bit	R/W	Default	Description
7-0	R	0h	**PM Data In (PMDI[7:0])** This is the data input buffer.

6.6.5.6 PM Data In Port with SCI (PMDISCI)

This register is the PMDIR buffer. Host written data or command is stored in this buffer. Reading this register (EC) generates SCI.

Address Offset: 05h/15h

Bit	R/W	Default	Description
7-0	R	0h	**PM Data In with SCI (PMDISCI[7:0])** This is the data input buffer with SCI. Reading this port will generate SCI when enabled.

6.6.5.7 PM Control (PMCTL)

Address Offset: 06h/16h

Bit	R/W	Default	Description
7	R/W	0h	**Enhance PM Mode (APM)** Setting this bit to '1' enables the enhance PM mode. The interrupts (IRQ, SCI or SMI) are automatically generated by hardware operations if enabled.
6	R/W	1h	**SCI Negative Polarity (SCINP)** Setting this bit to '1' causes the SCI polarity inversed (low active).
5-3	R/W	0h	**SCI Pulse Mode (SCIPM[2:0])** These bits are used to control the interrupt type to be level-triggered or edge-triggered (pulse) mode. In level-triggered mode, the default value of IRQ1/11/12 to SERIRQ via routing logic is low and will be set to high when the interrupt condition occurs. In edge-triggered mode, the default value of IRQ1/11/12 to SERIRQ via routing logic is low and a positive pulse will be generated when the interrupt condition occurs. Note that the polarity definition in edge-triggered is different from IRQM field in KBIRQR register. 000: Level-triggered mode. 001: Edge-triggered mode with 1-cycle pulse width. 010: Edge-triggered mode with 2-cycle pulse width. 011: Edge-triggered mode with 4-cycle pulse width. 100: Edge-triggered mode with 8-cycle pulse width. 101: Edge-triggered mode with 16-cycle pulse width. Other: reserved.
2	-	0h	**Reserved**
1	R/W	0h	**Output Buffer Empty Interrupt Enable (OBEIE)** Setting this bit to '1' enables the EC interrupt generation when the output buffer full flag is cleared (by host reading the data port).
0	R/W	0h	**Input Buffer Full Interrupt Enable (IBFIE)** Setting this bit to '1' enables the EC interrupt generation when the input buffer full flag is set (by host writing the data port or command port).

6.6.5.8 PM Interrupt Control (PMIC)

Address Offset: 07h/17h

Bit	R/W	Default	Description
7	-	0b	**Reserved**
6	R/W	1b	**SMI Negative Polarity (SMINP)** Setting this bit to '1' causes the SMI polarity inversed.
5-3	R/W	0h	**SMI Pulse Mode (SMIPM[2:0])** These bits are used to control the interrupt type to be level-triggered or edge-triggered (pulse) mode. In level-triggered mode, the default value of IRQ1/11/12 to SERIRQ via routing logic is low and will be set to high when the interrupt condition occurs. In edge-triggered mode, the default value of IRQ1/11/12 to SERIRQ via routing logic is low and a positive pulse will be generated when the interrupt condition occurs. Note that the polarity definition in edge-triggered is different from IRQM field in KBIRQR register. 000: Level-triggered mode. 001: Edge-triggered mode with 1-cycle pulse width. 010: Edge-triggered mode with 2-cycle pulse width. 011: Edge-triggered mode with 4-cycle pulse width. 100: Edge-triggered mode with 8-cycle pulse width. 101: Edge-triggered mode with 16-cycle pulse width. Other: reserved.
2	R/W	0b	**Host SCI Control Bit (SCIB)** This bit is the SCI generation bit when hardware SCI is disabled. Read always returns the current value of SCI.
1	R/W	0b	**Host SMI Control Bit (SMIB)** This bit is the SMI generation bit when hardware SMI is disabled. Read always returns the current value of SMI.
0	R/W	1b	**Host IRQ Control Bit (IRQB)** This bit is the IRQ generation bit when hardware IRQ is disabled. Read always returns the current value of IRQ.

6.6.5.9 PM Interrupt Enable (PMIE)

Address Offset: 08h/18h

Bit	R/W	Default	Description
7-6	-	0h	**Reserved**
5	R/W	0h	**Hardware SMI Enable (HWSMIEN)** Setting this bit to '1' enables the SMI generated by hardware control. Writing to the SMIB bit generates the SMI if this bit is set to '0'.
4	R/W	0h	**Hardware SCI Enable (HWSCIEN)** Setting this bit to '1' enables the SCI generated by hardware control. Writing to the SCIB bit generates the SCI if this bit is set to '0'.
3	R/W	0h	**Hardware IRQ Enable (HWIRQEN)** Setting this bit to '1' enables the IRQ generated by hardware control. Writing to the IRQB bit generates the IRQ if this bit is set to '0'.
2	R/W	0h	**SMI Enable (SMIEN)** Setting this bit to '1' enables the SMI generated by this module.
1	R/W	0h	**SCI Enable (SCIEN)** Setting this bit to '1' enables the SCI generated by this module.
0	R/W	0h	**IRQ Enable (IRQEN)** Setting this bit to '1' enables the IRQ generated by this module.

6.6.5.10 PM Interrupt Enable (PMIE)

Address Offset: 19h

Bit	R/W	Default	Description
7	R/W	0b	**Mailbox Enable (MBXEN)** 1b: Enable 16-byte PMC2EX mailbox 0b: Otherwise
6-0	-	-	**Reserved**

6.6.5.11 16-byte PMC2EX Mailbox 0-15 (MBXEC0-15)

Address Offset: F0h-FFh

Bit	R/W	Default	Description
7-0	R/W	-	**Mailbox Byte Content** This byte is the 16-byte PMC2EX mailbox in the EC side.

6.7 Trusted Mobile KBC (TMKBC)

6.7.1 Overview

This Trusted Mobile KBC supports the functions in an LT (LaGrande Technology) compatible platform associated with Trusted Input and Output for Mobile Keyboard Controller (TMKBC) Devices.

6.7.2 Features

- Compatible with the LT Trusted Mobile KBC Specification (Revision 0.95).
- Automatically generates interrupts to the host side and EC side when the status is changed.

6.7.3 Functional Description

6.7.4 Host Interface Registers

The registers of TMKBC can be divided into two parts: Host Interface Registers and EC Interface Registers. The host interface registers only can be accessed by the host processor. The following host interface registers are in the LT private register space, starting at base address B000h and accessed via LPC trusted port cycles.

Table 6-23. Host View Register Map, TMKBC

7	0	Offset
TMKBC Vendor ID Register (TVENDID)		01h-00h
TMKBC Device ID Register (TDEVID)		03h-02h
TMKBC Version Register (TVER)		05h-04h
Generic Capabilities Reporting Register (CAP)		06h
TMKBC Revision ID Register (TREVID)		07h
Configuration Register (CNF)		09h-08h
Control Register (CNT)		0Bh-0Ah
IRQ Capabilities Reporting Register (IRQCAP)		0Dh-0Ch
Reserved		0Fh-0Eh
Status Register (STS)		11h-10h
Reserved		12h
Extended Status Register (EXTSTS)		13h
Reserved		16h-14h
Interrupt Trigger Enable Register (INTTRIG)		17h
TMKBC Data Input Register (TDATAIN)		1Bh-18h
Reserved		1Fh-1Ch
TMKBC Data Output Register (TDATAOUT)		23h-20h

6.7.4.1 TMKBC Vendor ID Register (TVENDID)

This register reports the vendor ID of the TMKBC.

Address Offset: 01h-00h

Bit	R/W	Default	Description
15-0	R	-	**Vendor ID (VENDID)** Vendor's ID value. It is the same as PCI Vendor's ID.

6.7.4.2 TMKBC Device ID Register (TDEVID)

This register reports the device ID of the TMKBC.

Address Offset: 03h-02h

Bit	R/W	Default	Description
15-0	R	-	**Device ID (DEVID)** Device ID value.

6.7.4.3 TMKBC Version Register (TVER)

This register reports the version number of the TMKBC.

Address Offset: 05h-04h

Bit	R/W	Default	Description
15-0	R	-	**Version Number (VER)** Version number of the TMKBC logic.

6.7.4.4 Generic Capabilities Reporting Register (CAP)

This register reports the capabilities of the TMKBC.

Address Offset: 06h

Bit	R/W	Default	Description
7-4	R	-	**Reserved**
3	R	0b	**MSI Interrupt Capability (MSI)** This bit will be one if the TMKBC supports the optional MSI delivery method for interrupts.
2	R	0b	**LED Capability (LED)** This bit will be one if the TMKBC supports the optional LED.
1-0	R	00b	**Poll Rate (POLL)** This field indicates the rate at which the TMKBC must be polled if the TSW operates the TMKBC in a poll mode. 00: 6ms 01: 8ms 10: 10ms 11: 12ms

6.7.4.5 TMKBC Revision ID Register (TREVID)

This register reports the revision ID of the TMKBC.

Address Offset: 07h

Bit	R/W	Default	Description
7-0	R	-	**Revision ID (REVID)** Revision ID of the TMKBC.

6.7.4.6 Configuration Register (CNF)

This register is used to configure the TMKBC.

Address Offset: 09h-08h

Bit	R/W	Default	Description
15-13	-	-	**Reserved**
12-9	R/W	0000b	**TMKBC IRQ Selection (IRQSEL)** Software configures this field to select which interrupt to be used. Values must be programmed to it indicated in the IRQ Capabilities Reporting Register.
8	R/W	0b	**TMKBC Force IRQ (FIRQ)** Software sets this bit to one to force IRQ to be activated. This bit is used for testing the interrupt path.
7-2	-	-	**Reserved**
1	R/W	0b	**TMKBC Reset (TMKBCRST)** Software sets this bit to 1 and then to 0 to reset the TMKBC logic.
0	R/W	0b	**TMKBC Enable (TMKBCEN)** Software sets this bit to put the TMKBC into the Trust mode. 1: Trust mode 0: Legacy mode

6.7.4.7 Control Register (CNT)

This register is used to control the TMKBC.

Address Offset: 0Bh-0Ah

Bit	R/W	Default	Description
15-9	-	-	**Reserved**
8	R/W	0b	**Kana LED Enable (LED)** Software sets this bit to one to turn on the Kana LED.
7	R/W	0b	**Compose LED Enable (COMLED)** Software sets this bit to one to turn on the Compose LED.
6	R/W	0b	**Scroll Lock LED Enable (SCRLED)** Software sets this bit to one to turn on the Scroll Lock LED.
5	R/W	0b	**Cap Lock LED Enable (CAPLED)** Software sets this bit to one to turn on the Cap Lock LED.
4	R/W	0b	**Num Lock LED Enable (NUMLED)** Software sets this bit to one to turn on the Num Lock LED.
3-1	-	-	**Reserved**
0	R/W	0b	**TMKBC Command Control (CMDCNT)** Software sets this bit to one to tell the TMKBC to execute the command that has been written to the Data Input Register. This bit will be cleared after the TMKBC completes the command and then places the result in the Data Output Register. Software must not perform a subsequent command until the current command has been completed.

6.7.4.8 IRQ Capabilities Reporting Register (IRQCAP)

This register is used to report the IRQ capabilities.

Address Offset: 0Dh-0Ch

Bit	R/W	Default	Description
15-0	R	DFFEh	**IRQ Capabilities (IRQCAP)** The respective bit will be one if the TMKBC can be configured to select that interrupt. For example, if the TMKBC can be configured to generate IRQ1 and IRQ14, bits 1 and 14 will be set in this register.

6.7.4.9 Status Register (STS)

This register reports the status of the TMKBC.

Address Offset: 11h-10h

Bit	R/W	Default	Description
15	R	0b	**TMKBC Operating Mode (MODE)** 1: In the Trust mode. 0: Not in the Trust mode.
14	R	0b	**Extended Error (EXTERR)** 1: Some types of errors or other event occurs. See the Extended Status Register for further details. 0: No error occurs.
13-12	-	-	**Reserved**
11-8	R/W	1000b	**Write Buffer Status (WBUFSTS)** 0: Data Input (Write) buffer is full. Any value other than 0 indicates the number of bytes that can be written to the Data Input (Write) buffer.
7-6	R	00b	**Read Buffer Data Type (RBUFTYP)** 00: Command Response 01: First generation HID device
5-4	-	-	**Reserved**
3-0	R	0000b	**Read Buffer Status (RBUFSTS)** 0: Data Output (Read) buffer is empty. Any value other than 0 indicates the number of bytes that can be read from the Data Output (Read) buffer.

6.7.4.10 Extended Status Register (EXTSTS)

This register is used to report errors and other details of the status.

Address Offset: 13h

Bit	R/W	Default	Description
7-4	-	-	**Reserved**
3	R	0b	**Force IRQ STS (FIRQS)** This bit is set to indicate that IRQ is asserted due to the TMKBC Force IRQ bit being set. This bit is cleared when the TMKBC Force IRQ bit is cleared.
2	R/W1C	0b	**Command Error Status (CERRS)** This bit is set when an error occurs in the command unit this bit is cleared by writing a one to the position of this bit.
1	R/W1C	0b	**Mouse Overrun Status (MOS)** This bit is set when the Mouse overrun occurs. This bit is cleared by writing a one to the position of this bit.
0	R/W1C	0b	**Keyboard Overrun Status (KOS)** This bit is set when the keyboard overrun occurs. This bit is cleared by writing a one to the position of this bit.

6.7.4.11 Interrupt Trigger Enable Register (INTTRIG)

This register is used to enable the interrupt.

Address Offset: 17h

Bit	R/W	Default	Description
7-1	-	-	**Reserved**
0	R/W	0b	**Interrupt Enable (INTEN)** Software writes this bit to one to enable the interrupt. Once the TMKBC has sent an interrupt, this bit (INTEN) will be reset to a 0 and the TMKBC must not send another interrupt until it is set to 1 by software.

6.7.4.12 TMKBC Data Input Register (TDATIN)

This register is used to write data and commands to the TMKBC.

Address Offset: 1Bh-18h

Bit	R/W	Default	Description
7-0	W	00h	**Data Input (DATIN)** Data written to this register will be stored in the TMKBC's input buffer.

6.7.4.13 TMKBC Data Output Register (TDATOUT)

This register is used to read data from the TMKBC.

Address Offset: 23h-20h

Bit	R/W	Default	Description
7-0	R	00h	**Data Output (DATOUT)** Read this register will get data from the TMKBC's output buffer.

6.7.5 EC Interface Registers

The registers of the TMKBC can be divided into two parts: Host Interface Registers and EC Interface Registers. The EC interface registers can only be accessed by the internal 8032 processor. The base address of the EC interface register is 2400h.

Table 6-24. EC View Register Map, TMKBC

7	0	Offset
EC Side Configuration Register (ECCON)		00h
Status Control Register (STSCON)		01h
EC Data Input Register (EDATIN)		02h
EC Data Output Register (EDATOUT)		03h
EC Buffer Status Register (EBUFSTS)		04h
EC Status Register (ESTS)		05h
EC Vendor ID Low Register (EVENL)		06h
EC Vendor ID High Register (EVENH)		07h
EC Device ID Low Register (EDEVL)		08h
EC Device ID High Register (EDEVH)		09h
EC Version Low Register (EVERL)		0Ah
EC Version High Register (EVERH)		0Bh
EC Revision ID Register (EREVID)		0Ch

6.7.5.1 EC Side Configuration Register (ECCON)

Address Offset: 00h

Bit	R/W	Default	Description
7-6	-	-	**Reserved**
5	R/W	0b	**EC Read Buffer Interrupt Enable (ERBIE)** This bit is used to enable the interrupt when the read buffer has the 8-byte data package.
4	R/W	0b	**Operating Mode Interrupt Enable (MIE)** This bit is used to enable the interrupt when the operating mode is changed (the TMKBCEN bit is enabled or disabled).
3-0	R/W	0h	**EC IRQ Selection (EIRQS)** Software configures this field to program the TMKBC IRQ Selection bits in the Configuration Register.

6.7.5.2 Status Control Register (STSCON)

Address Offset: 01h

Bit	R/W	Default	Description
7-4	-	-	**Reserved**
3	W	0b	**Clear TMKBC Command Control (CTC)** This bit is used to clear the TMKBC Command Control bit in the Control Register.
2	W	0b	**Set Command Error Status (SCES)** This bit is used to set the Command Error Status bit in the Extended Status Register to 1.
1	W	0b	**Set Mouse Overrun Status (SMOS)** This bit is used to set the Mouse Overrun Status bit in the Extended Status Register to 1.
0	W	0b	**Set Keyboard Overrun Status (SKOS)** This bit is used to set the Keyboard Overrun Status bit in the Extended Status Register to 1.

6.7.5.3 EC Data Input Register (EDATIN)

Address Offset: 02h

Bit	R/W	Default	Description
7-0	R	00h	**EC Data Input (EDATIN)** Reading this register will get data from the TMKBC's input buffer.

6.7.5.4 EC Data Output Register (EDATOUT)

This register is used to write data to the host side.

Address Offset: 03h

Bit	R/W	Default	Description
7-0	W	00h	**EC Data Output (EDATOUT)** Data written to this register will be stored in the TMKBC's output buffer.

6.7.5.5 EC Buffer Status Register (EBUFSTS)

Address Offset: 04h

Bit	R/W	Default	Description
7-4	R	1000b	**EC Write Buffer Status (EWBSTS)** 0: Write buffer is full. Any value other than 0 indicates the number of bytes that can be written to the Write buffer.
3-0	R	0000b	**EC Read Buffer Status (ERBSTS)** 0: Read buffer is empty. Any value other than 0 indicates the number of bytes that can be read from the Read buffer.

6.7.5.6 EC Status Register (ESTS)

Address Offset: 05h

Bit	R/W	Default	Description
7	R	0b	**TMKBC Enable Status** This bit will mirror the value of the TMKBCEN bit in the CNF Register. The EC firmware can read this bit to get the value of the TMKBCEN bit in the CNF Register.
2-6	-	-	**Reserved**
1	R/W1C	0b	**EC Read Buffer Status (ERBS)** This bit is set when the read buffer has the 8-byte data package.
0	R/W1C	0b	**Trust Mode Change Status (TMCS)** This bit is set when the operating mode is changed. This bit is cleared by writing a one to the position of this bit.

6.7.5.7 EC Vendor ID Low Register (EVENL)

This register is used to define the Vendor ID of bits [7:0].

Address Offset: 06h

Bit	R/W	Default	Description
7-0	R/W	00h	**EC Vendor ID Low Bits (EVIDL)** EC firmware can use these bits to define the Vendor ID of bits [7:0].

6.7.5.8 EC Vendor ID High Register (EVENH)

This register is used to define the Vendor ID of bits [15:8].

Address Offset: 07h

Bit	R/W	Default	Description
7-0	R/W	00h	**EC Vendor ID High Bits (EVIDH)** EC firmware can use these bits to define the Vendor ID of bits [15:8].

6.7.5.9 EC Device ID Low Register (EDEVL)

This register is used to define the Device ID of bits [7:0].

Address Offset: 08h

Bit	R/W	Default	Description
7-0	R/W	00h	**EC Device ID Low Bits (EDEVL)** EC firmware can use these bits to define the Device ID of bits [7:0].

6.7.5.10 EC Device ID High Register (EDEVH)

This register is used to define the Device ID of bits [15:18].

Address Offset: 09h

Bit	R/W	Default	Description
7-0	R/W	00h	**EC Device ID High Bits (EDEVH)** EC firmware can use these bits to define the Device ID of bits [15:18].

6.7.5.11 EC Version Low Register (EVERL)

This register is used to define the Version Register of bits [7:0].

Address Offset: 0Ah

Bit	R/W	Default	Description
7-0	R/W	00h	**EC Version Register Low Bits (EVRL)** EC firmware can use these bits to define the Version Register of bits [7:0].

6.7.5.12 EC Version High Register (EVERH)

This register is used to define the Version Register of bits [15:8].

Address Offset: 0Bh

Bit	R/W	Default	Description
7-0	R/W	00h	**EC Version Register High Bits (EVRH)** EC firmware can use these bits to define the Version Register of bits [15:8].

6.7.5.13 EC Revision ID Register (EREVID)

This register is used to define the Version Register of bits [7:0].

Address Offset: 0Ch

Bit	R/W	Default	Description
7-0	R/W	00h	**EC Revision ID Register (EREVID)** EC firmware can use these bits to define the Revision ID Register.

This page is intentionally left blank.

7. EC Domain Functions

7.1 8032 Embedded Controller (EC)

7.1.1 Overview

The embedded controller is an 8032 micro-controller which is an 8051-compatible micro-controller.

7.1.2 Features

- Supports Sleep (a.k.a. power-down) and Idle mode
- Supports two external interrupts and one power fail interrupt
- Supports 64K code/data space
- Supports 256 bytes internal(w.r.t. 8032) RAM, with 128 bytes special function register
- Supports 3x16-bit timer/counter from GPE5, TMRI0 and TMRI1
- Supports 1xwatch dog timer
- Supports full duplex UART
- Memory mapped I/O configuration

7.1.3 General Description

The 8032TT is a high-performance 8051 family compatible micro-controller based on RISC architecture & Pipeline design. This IP Specification of interface timing, external Data Memory read / write timing and external Program Memory read timing are different from that of the standard 80C52. But instruction-set is fully compatible with standard 8051 family.

Table 7-1. 8032 Port Usage

Signal	Port	Note
8032 External Data Bus	P0[7:0], P2[7:0], P3[7:6]	EC Bus MOVX instruction
INT0#	P3[2]	Driven by INTC
INT1#	P3[3]	Driven by INTC
TXD	P3[1]	TXD signal on pin
RXD	P3[0]	RXD signal on pin
T0 Timer	P3[4]	Driven by GPE5
T1 Timer	P3[5]	Driven by TMRI0 pin
T2 Timer	P1[0] Note: T2 and T2EX should be taken care of if 8032 banks are switched by P1. See also section 0	Driven by TMRI1 pin
T2EX Timer	P1[1]	Unused

7.1.4 Functional Description

Memory
The 8032 manipulates operands in four memory spaces. There are 64K-byte Program Memory space, 64K-byte External Data Memory space, 256-byte Internal Data Memory, and with a 16-bit Program Counter space. The Internal Data Memory address space is further divided into the 256-byte Internal Data RAM and 128-byte Special Function Register address space. The up 128-bytes RAM can be reached by indirect addressing. Four Register Banks, 128 addressable bits, and the stack reside in the Internal Data RAM.

I/O ports
The 8032 has 8-bit I/O ports. The four ports provide 32 I/O lines to interface to the external world. All four ports are both byte and bit addressable. Port 0 is used as an Address/Data bus and Port 2 is used as the upper 8-bits address when external memory/device is accessed. Port 3 contains special control signals such as the read and write strobes. Port 1 is used for both I/O and external interrupts.

Interrupts
In the 8032 there are six hardware resources that generate an interrupt request. The starting addresses of the interrupt service program for each interrupt source are like standard 8052. The external interrupt request inputs (INT0# , INT1#) can be programmed for either negative edge or low level-activated operation.

Timers / Counters
The 8032 has three 16-bit timers/counters that are the same as the timers of the standard 8051 family. The 8032 has two additional watchdog timers for system failure monitor.

Serial I/O ports
The 8032 has one programmable, full-duplex serial I/O port whose function is the same as that of 8051 family and dependent on the requirement.

Power Management
The 8032 supports Idle and Doze/Sleep modes of operation. In the Idle mode, the EC 8032 is stopped operation while the peripherals continue operating. In the Doze/Sleep mode, all the clocks are stopped. The Doze/Sleep mode can be waked up by INT0# or INT1# external interrupt with level trigger.

Dual Data Pointer
The 8032 has two data pointers (DTPR, DTPR1). These two data pointers can help users enhance lots of block data memory moving. Using dual data pointers to move block data almost saves half of the time spent by original 8051 codes.

Watch Dog Timers Interrupt / Reset
The 8032 creates one programmable watchdog timers to monitor system failure. That is maximum 2^26.

Hardware Multiply
8032 includes a hardware multiplier to enhance calculating speed. 8032 can finish one multiply instruction at 1 machine cycle.

7.1.5 Memory Organization

In 8032, the memory is organized as three address spaces and the program counter.
The memory spaces are shown in EC Memory Map.
- 16-bit Program Counter
- 64k-byte Program Memory address space
- 64k-byte External Data Memory address space
- 256-byte Internal Data Memory address

The 16-bit Program Counter register provides 8032 with its 64k addressing capabilities. The program Counter allows users to execute calls and branches to any location within the Program Memory space. There are no instructions that permit program execution to move from the Program Memory space to any of the data memory spaces.

The 64k-byte Program Memory address space is located by dedicated address bus. The 64k-byte External Data Memory address space is automatically accessed when the MOVX instruction is executed. The Internal Data Memory space is subdivided into a 256-byte Internal Data RAM address Space and a 128-byte Special Function Register address space as shown in the SFRs Map. The Internal Data RAM address space is 0 to 255. Four 8-Register Banks occupy locations 0 through 31. The stack can be located anywhere in the Internal Data RAM address space. In addition, 128 bit location ns of the on-chip RAM are accessible through Direct Addressing.

7.1.6 On-Chip Peripherals

Table 7-2. System Interrupt Table

Interrupt Source	Request Flag		Priority Flag	Enable Flag	Vector Address	Priority-Within-Level	Flag Cleared by Hardware?
External Request	IE0/TCON.1		PX0/IP.0	EX0/IE.0	0003h	1	Edge-Yes Level-No
Internal Timer0/Counter0	TF0/TCON.5		PT0/IP.1	ET0/IE.1	000Bh	2	Yes
External Request	IE1/TCON.3		PX1/IP.2	EX1/IE.2	0013h	3	Edge-Yes Level-No
Internal Timer1/Counter1	TF1/TCON.7		PT1/IP.3	ET1/IE.3	001Bh	4	Yes
Internal Serial Port	Xmit	TI/SCON.1	PS/IP.4	ES/IE.4	0023h	5	No
	Rcvr	RI/SCON.0					
Internal Timer2/Counter2	TF2/T2CON.7		PT2/IP.5	ET2/IE.5	002Bh	6	No
	EXF2/TSCON.6						

Figure 7-1. Interrupt Control System Configuration

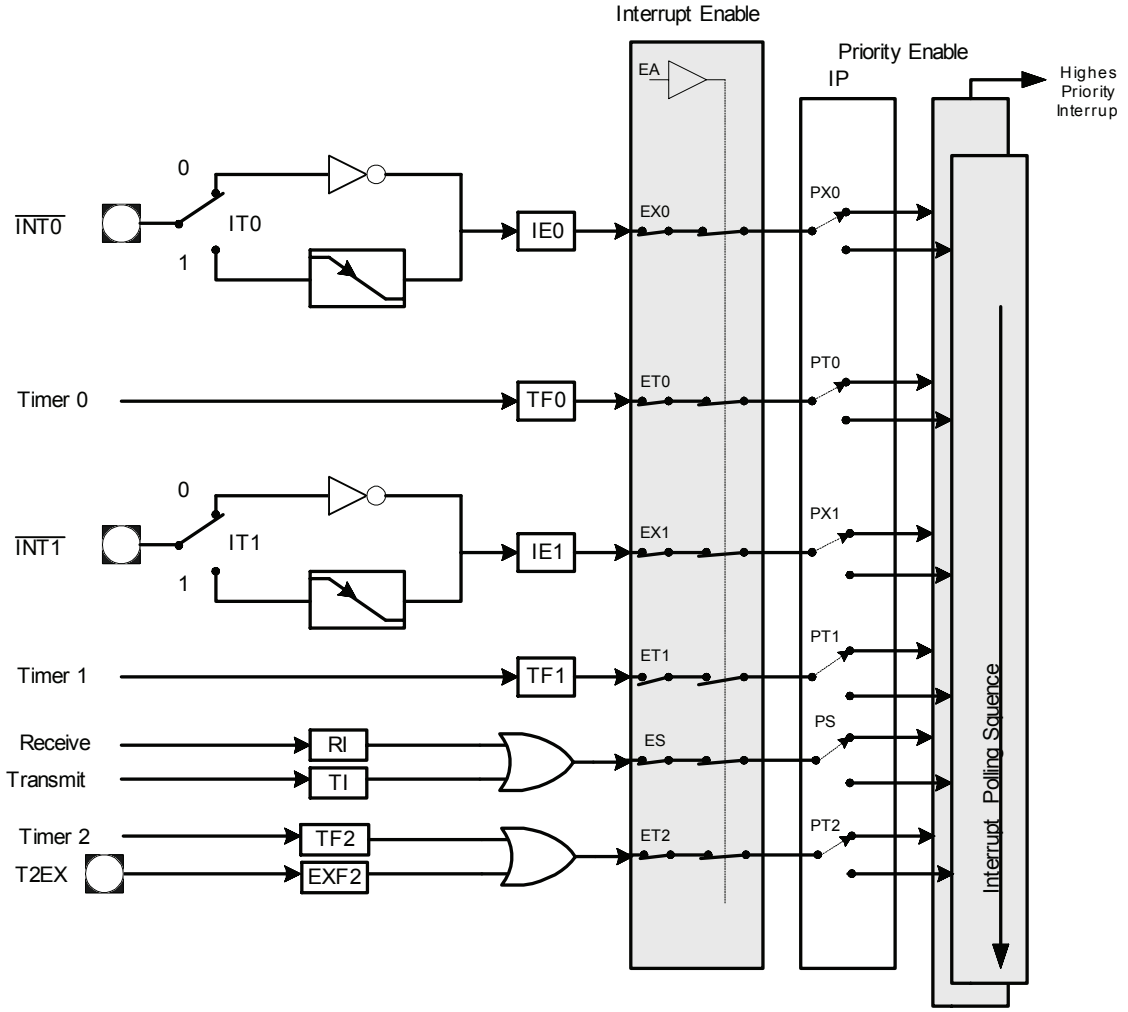

Note: T2EX is tied to logic high and is not available in IT8512.

External Interrupt
External Interrupt INT0# and INT1# input signal may each be programmed to be level-triggered or edge triggered depending upon bits IT0 and IT1 in the TCON register. If IT0 or IT1 = 0, INT0# or INT1# is triggered by detected low at the input signal. If IT0 or IT1 = 1, INT0# or INT1# is negative-edge triggered. External interrupts are enabled with bits EX0 and EX1in the IE register. Evens on the external interrupt input signals set the interrupt flags IE0 or IE1 in TCON. These request bits are cleared by hardware vectors to service routines only if the interrupt is negative-edge triggered. If the interrupt is level triggered, the interrupt service routine must clear the request bit. External hardware must release INT0# or INT1# before the service routine completes, or an additional interrupt is requested.

External interrupt input signals are sampled once every oscillator clock's rising edge. A level-triggered interrupt input signal held low or high for at least three clocks guarantees detection. Edge-triggered external interrupts only the request input signal for one clo/ck time. This ensures edge recognition and sets interrupt request bit EX0 or EX1. The 8032 clears EX0 or EX1 automatically during service routine fetch cycles for edge-triggered interrupts.

Timer Interrupts
Sources of timer 0, timer 1 and timer 2 are GPE5, TMRI0 and TMRI1 from pins. Three timer-interrupt request bits TF0, TF1 and TF2 are set by timer 0, timer 1 and timer 2 overflow. When timer 0 and timer 1 interrupts are generated, the bits TF0 and TF1 are cleared by an on-chip hardware vector to an interrupt service routine. Timer 2 is different from timer 0 or timer 1. Timer 2 has to clear TF2 bit by software writing when timer 2 interrupt is generated. Timer interrupts are enabled by bits ET0, ET1, and ET2 in the IE register.

Timer 2 interrupts are generated by a logical OR of bits TF2 and EXF2 in register T2CON. Neither flag is cleared by a hardware vector to a service routine. In fact, the interrupt service routine must determine if TF2 or EXEF2 generates the interrupt, and then clear the bit. Timer 2 interrupt is enabled by ET2 in register IE.

Serial Port Interrupt
Serial port interrupts are generated by the logical OR of bits RI and TI in the SCON register. Neither flag is cleared by a hardware vector to the service routine. The service routine resolves RI and TI interrupt generation and clears the serial port request flag. The serial port interrupt is enabled by bit ES in the IE register in the same way by using serial port 1.

Interrupt Priority
8032 has 2 level priorities. Setting / clearing a bit in the Interrupt Priority register (IP) or Extent Interrupt Priority register (EIP) establish its associated interrupt request as a high / low priority. If a low-priority level interrupt is being serviced, a high-priority level interrupt will interrupt it. However, an interrupt source cannot interrupt a service program of the same or higher level. The interrupt priority is shown on Interrupt Control System Configuration.

Interrupt Response Time
The Figure of Interrupt Response Time shows the response time is between the interrupt request being active and the interrupt service routing being executed. The minimum interrupt response time is eight clocks that when an interrupt request asserts after the ending instruction execution completes. The maximum interrupt response time is 24 clocks when an interrupt request asserts during the ending instruction, DJNZ direct, rel or other instruction sets whose operation period is 16 clocks and is decoded ok. However, a high priority interrupt asserts while a low priority interrupt service program is executing. The minimum and the maximum interrupt response time is 8 clocks and 24 clocks respectively.

Figure 7-2. Interrupt Response Time

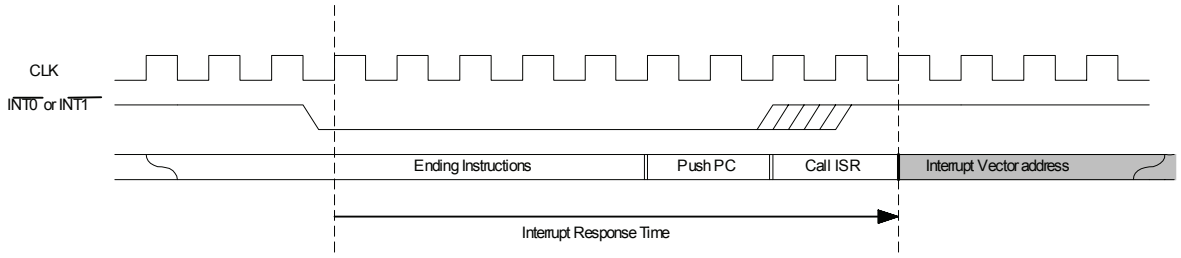

7.1.7 Timer / Counter

Timer 0
Timer 0 functions as either a timer or event counter in four modes of operation. Timer 0 is controlled by the four low-order bits of the TMOD register and bits 5, 4, 1 and 0 of the TCON register. The TMOD register selects the method of timer gating (GATE), timer or counter operation (C/T), and mode of operation (M1, M0). The TCON register provides timer 0 control functions: overflag (TF0), run control (TR0), interrupt flag (IE0), and interrupt type control (IT0). For normal timer operation (GATE = 0), setting TR0 allows TL0 to be incremented by the selected input. Setting GATE and TR0 allows INT0# to control timer operation.

Timer0/Mode 0 (13-bit Timer)
Mode 0 configures timer 0 as a 13-bit timer which is set up as an 8-bit timer (TH0 register) with a module 32 prescaler implemented with the lower five bits of the TL0 register. The upper three bits of TL0 register are indeterminate and should be ignored. Prescaler overflow increments the TH0 register.

Timer 0/ Mode 1 (16-bit Timer)
Mode 1 configures timer 0 as a 16-bit timer with TH0 and TL0 connected in cascade. The selected input increments TL0.

Figure 7-3. Timer 0/1 in Mode 0 and Mode 1

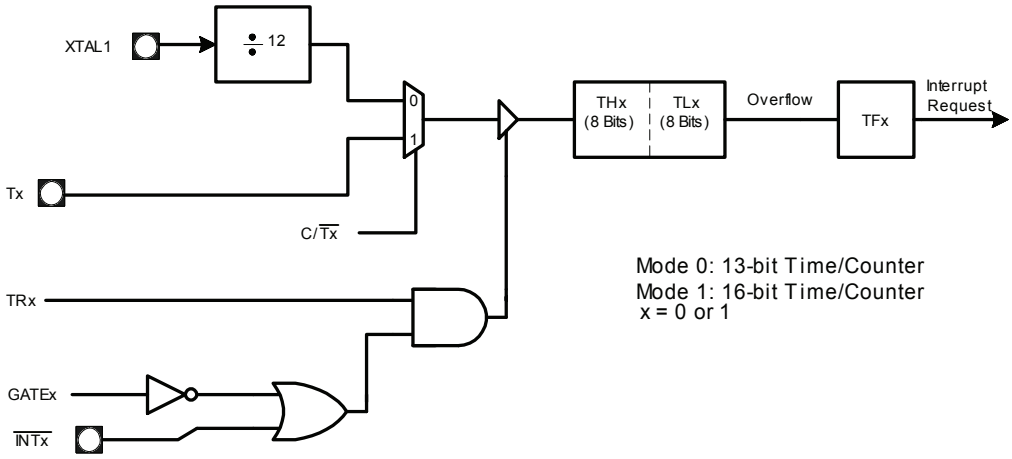

Timer 0/ Mode 2 (8-bit Timer With Auto-reload)
Mode 2 configures timer 0 as an 8-bit timer (TL0 register) that automatically reloads from the TH0 register. TL0 overflow sets the timer overflow flag (TF0) in the TCON register and reloads TL0 with the contents of TH0, which is preset by software. When the interrupt request is serviced, hardware clears TF0. The reload leaves TH0 unchanged.

Figure 7-4. Timer 0/1 in Mode 2, Auto-Reload

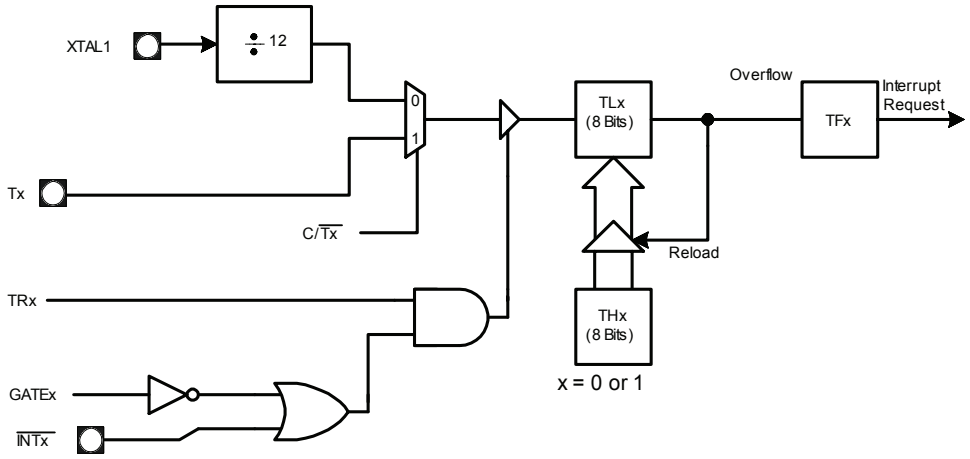

Timer 0/ Mode 3(Two 8-bit Timers)

Mode 3 configures timer 0 such that registers TL0 and TH0 operate as separate 8-bit timers. This mode is provided for application requiring an additional 8-bit timer or counter. TL0 uses the timer 0 control bits C/T and GATE in TMOD, and TR0 in TCON in the normal manner. TH0 is locked into a timer function (counting 8032_Freq/12) and takes over use of the timer 1 interrupt (TF1) and run control (TR1) bits. Thus, operation of timer 1 is restricted when timer 0 is in mode 3.

Note: 8032_Freq equals to EC Clock Frequency (listed in Table 10-1 on page 299).

Figure 7-5. Timer 0 in Mode 3 Two 8-bit Timers

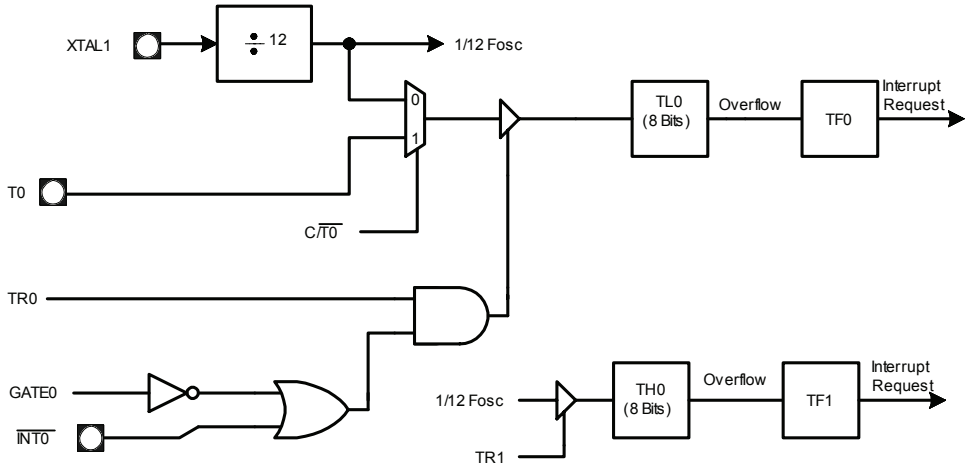

Timer 1

Timer 1 functions as either a timer or event counter in three modes of operation. The logical configuration for modes 0, 1 and 2 is the same as that of Timer 0. Mode 3 of timer 1 is a hold-count mode.

Timer 1 is controlled by the four high-order bits of the TMOD register and bits 7, 6, 3 and 2 of the TCON register. The TMOD register selects the method of timer gating (GATE), timer or counter operation (C/ T), and mode of operation (M1 and M0). The TCON register provides timer 1 control functions: overflow flag (TF1), run control (TR1), interrupt flag(IE1), and interrupt type control (IT1).

For normal timer operation (GATE = 0), setting TR1 allows timer register TL1 to be incremented by the selected input. Setting GATE and TR1 allows external input signal INT1# to control timer operation. This setup can be used to make pulse width measurements.

Timer 1/ Mode 0 (13-bit Timer)
Mode 0 configures timer 0 as a 13-bit timer, which is set up as an 8-bit timer (TH1 register) with a modulo-32 prescaler implemented with the lower 5 bits of the TL1 register. The upper 3 bits of the TL1 register are ignored. Prescaler overflow increment the TH1 register.

Timer1/ Mode 1 (16-bit Timer)
Mode 1 configures timer 1 as a 16-bit timer with TH1 and TL1 connected in cascade. The selected input increments TL1.

Timer 1/ Mode 2 (8-bit Timer)
Mode 2 configures timer 1 as an 8-bit timer (TL1 register) with automatic reload from the TH1 register on overflow. Overflow from TL1 sets overflow flag TF1 in the TCON register and reloads TL1 with the contents of TH1, which is preprogrammed by software. The reload leaves TH1 unchanged.

Timer 1/ Mode3 (Halt)
Placing timer in mode 3 causes it to halt and its count. This can be used to halt timer 1 when the TR1 run control bit is not available, i.e., when timer 0 is in mode 3.

Timer 2
Timer 2 is a 16-bt timer/count maintained by two eight-bit timer registers, TH2 and TL2, which are connected in cascade. The timer/counter 2 mode control register T2MOD and the timer /counter control register T2CON control the operation of timer 2.

Timer 2 provides the following operating modes: capture mode, auto-reload mode, baud rate generator mode, and programmable clock-out mode. Select the operating mode with T2MOD and TCON register bits as shown in table of Timer 2 Modes of Operation. Auto-reload is the default mode. Setting RCLK and/or TCLK selects the baud rate generator mode.

Timer 2 operation is similar to timer 0 and timer 1. C/2 T selects 8032_Freq/12 (timer operation) or external input signal T2 (counter operation) as the timer register input. Setting TF2 to be incremented by the selected input.

Timer 2/ Capture Mode
In the capture mode, timer 2 functions as a 16-bit timer or counter. An overflow condition sets bit TF2, which you can use to request an interrupt. Setting the external enable bit EXEN2 allows the RCAP2Hand RCAP2L registers to capture the current value in timer registers TH2 and TL2 in response to a l-to-0 transition at external input T2EX. The transition at T2EX also sets bit EXF2 on T2CON. The EXF2 bit, like TF2, can generate an interrupt. TR2 must be enabled when this mode is run.

Note: T2EX is tied to logic high and is not available in IT8512.

Figure 7-6. Timer 2: Capture Mode

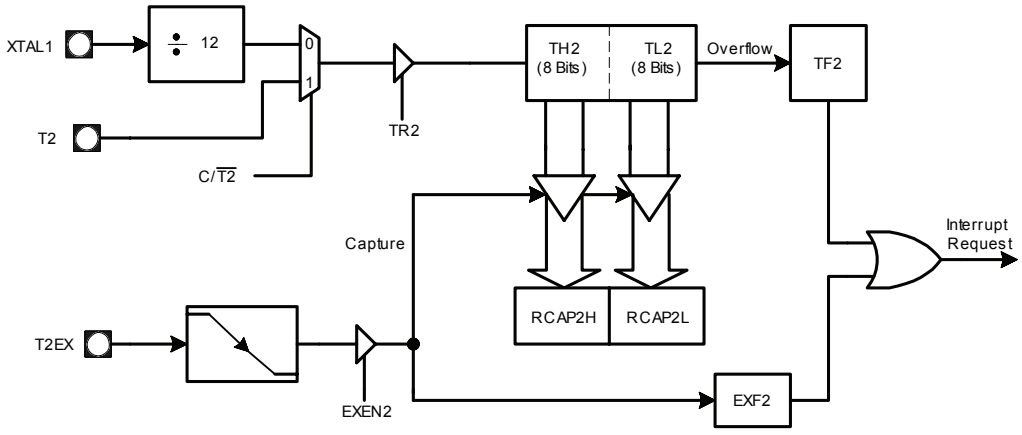

Note: T2EX is tied to logic high and is not available in IT8512.

Timer 2/ Auto-reload Mode
The auto-reload mode configures timer 2 as a 16-bit timer or event counter with automatic reload. The timer operates as an up counter or up/down counter, as determined by the down counter enable bit (DCEN). At device reset, DCEN is cleared, so in the auto-reload mode, timer 2 defaults to operation as an up counter. TR2 must be enabled when this mode is run.

Up Counter Operation
When DCEN = 0, timer 2 operates as an up counter. If EXEN = 0, timer 2 counts up to FFFFh and sets the TF2 overflow flag. The overflow condition loads the 16-bit value in the reload/capture registers (RCAP2H, RCAP2L) into the timer registers (TH2, TL2). The values in RCAP2H and RCAP2L are preset by software.

If EXEN2 = 1, the timer registers are reloaded by either a timer overflow or a high-to-low transition at external input T2EX. This transition also sets the EXF2 bit in the T2CON register. Either TF2 or EXF2 bit can generate a timer 2 interrupt request. TR2 must be enabled when its mode is run.

Up/Down Counter Operation
When DCEN = 1, timer 2 operates as an up/down counter. External input signal T2EX controls the direction of the count. When T2EX is high, timer 2 counts up. The timer overflow occurs at FFFFh, which sets the timer 2 overflow flag (TF2) and generates an interrupt request. The overflow also causes the 16-bit value in RCAP2H and RCAP2L to be loaded into the timer registers TH2 and TL2.

When T2EX is low, timer 2 counts down. Timer underflow occurs when the count in the timer registers (TH2, TL2) equals the value stored in RCAP2H and RCAP2L. The underflow sets the TF2 bit and reloads FFFFh into the timer registers.

The EXF2 bit toggles when timer 2 overflows or underflows changing the direction of the count. When timer 2 operates as an up/down counter, EXF2 does not generate an interrupt. This bit can be used to provide 17-bit resolution. TR2 must be enabled when his mode is run.

Figure 7-7. Timer 2: Auto Reload (DECN = 0)

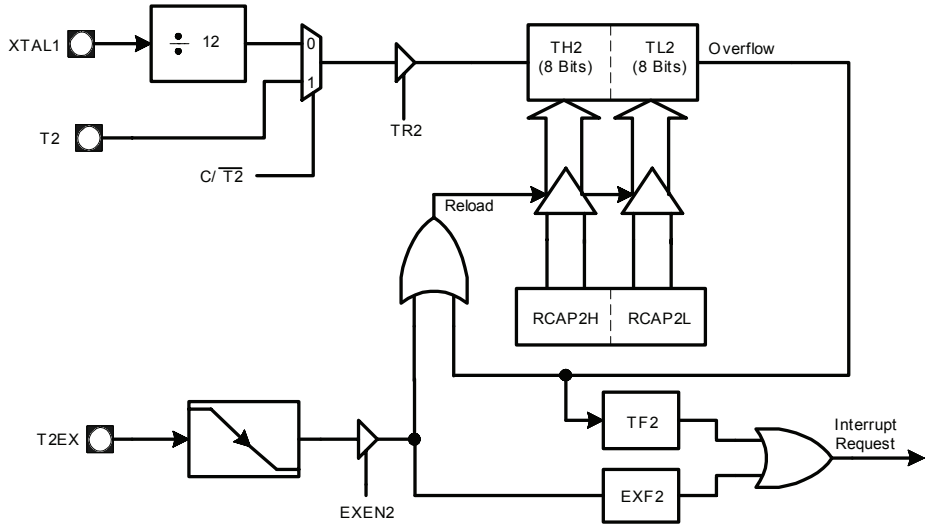

Note: T2EX is tied to logic high and is not available in IT8512.

Figure 7-8. Timer 2: Auto Reload Mode (DECN = 1)

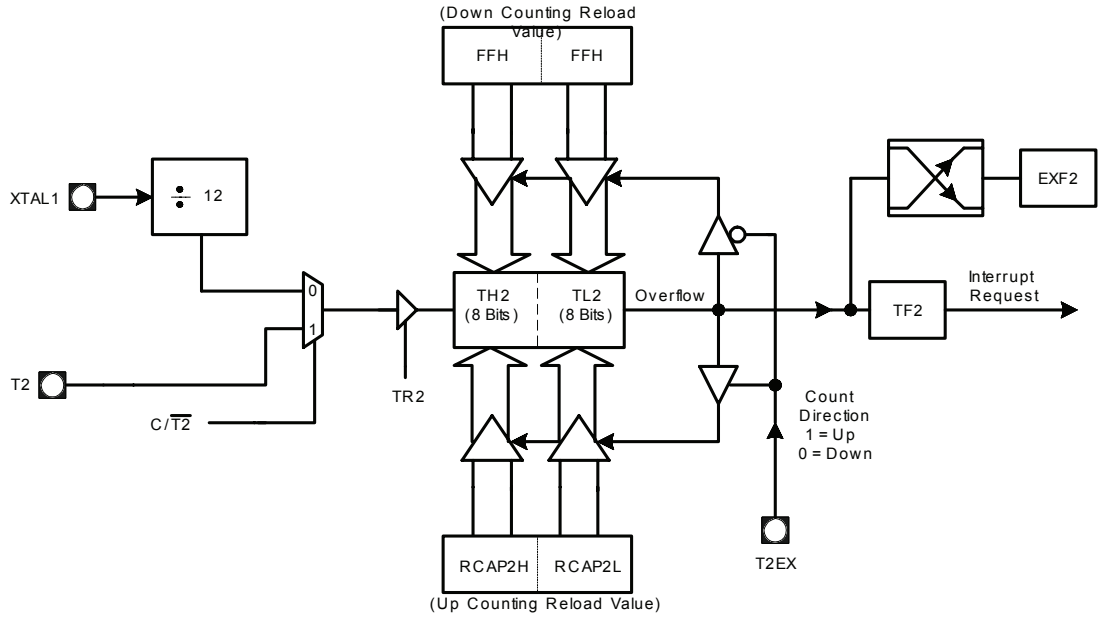

Note: T2EX is tied to logic high and is not available in IT8512.

Timer 2/ Baud Rate Generator Mode
This mode configures timer 2 as a baud rate generator for use with the serial port. Select this mode by setting the RCLK and/or TCLK bits in T2CON.

Timer 2/ Clock-out Mode
In the clock-out mode, timer 2 functions as a 50%-duty-cycle, variable-frequency clock. The input clock increments TL0 at frequency 8032_Freq/2. The timer repeatedly counts to overflow from a preloaded value. At overflow, the contents of the RCAP2H and RCAP2L registers are loaded into TH2/TL2. In this mode, timer 2 overflows do not generate interrupts. The formula gives the clock-out frequency as a function of the system oscillator frequency and the value in the RCAP2H and RCAP2L registers:

Clock-out Frequency = 8032_Freq / {4X(65536 - RCAP2H, RCAP2L)}

Note: 8032_Freq equals to EC Clock Frequency (listed in Table 10-1 on page 299).

Table 7-3. Timer 2 Modes of Operation

Mode	RCLK OR TCLK (in T2COON)	CP/RL2# (in T2MOD)	T2OE (in T2MOD)
Auto-reload Mode	0	0	0
Capture Mode	0	1	0
Baud Rate Generator Mode	1	X	X
Programmable Clock-Out	X	0	1

Figure 7-9. Timer 2: Clock Out Mode

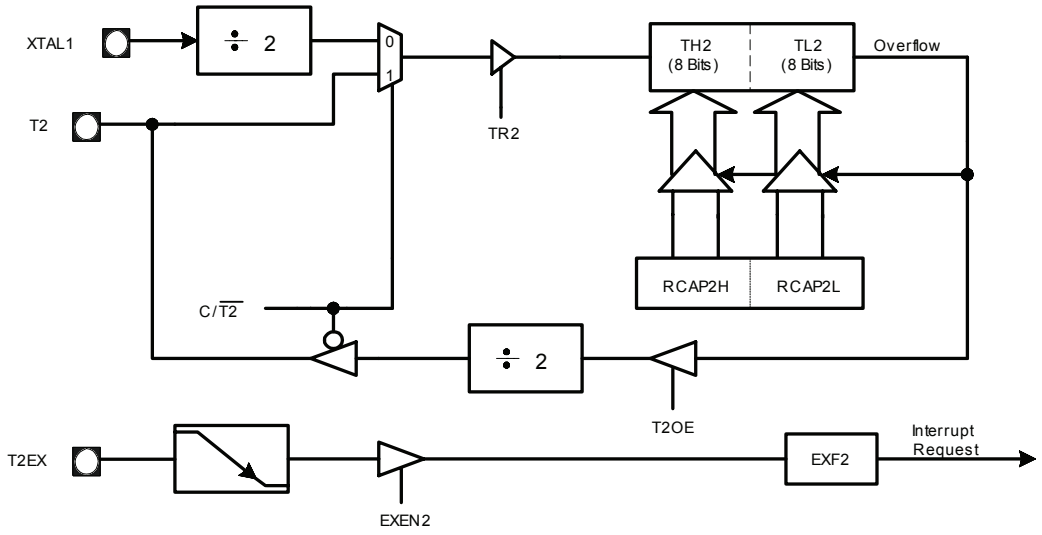

Note: T2EX is tied to logic high and is not available in IT8512.

Watchdog Timer

The watchdog timer has system reset functions. Users can set WD1-1, WD1-0 (in register CKCON, 8Eh) to choose 2^17, 2^20, (56/63)*2^23 or 2^26 counter for Watchdog Timer. After the Watchdog Timer counts the specific counter and an overflow occurs, set WDTRST Flag (in register WDTCON, D8h) and finally reset the 8032. If 8032 has been reset by Watchdog Timer, WDTEN Flag remains one.

Figure 7-10. Watchdog Timer

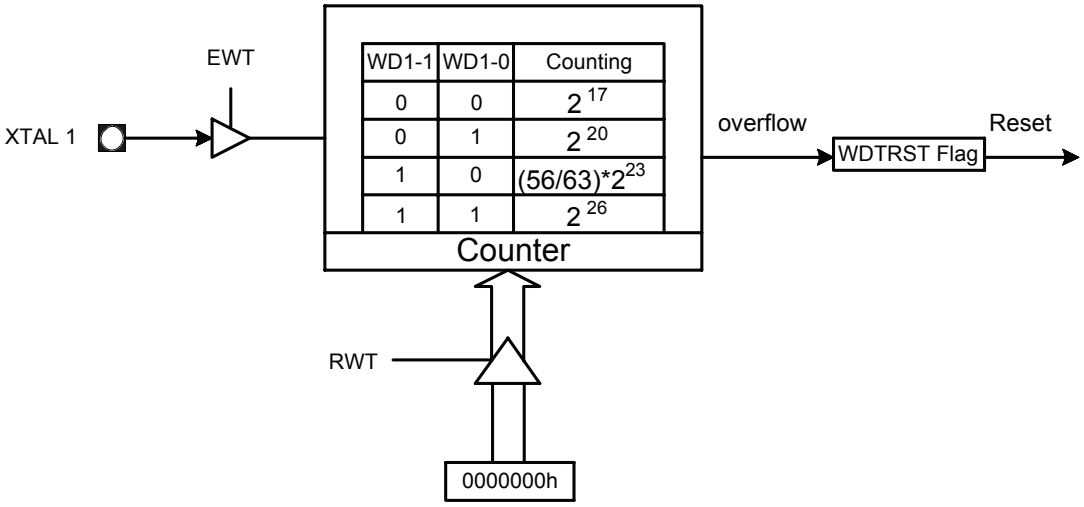

SERIAL I/O PORT

The serial I/O port provides both asynchronous communication modes. It operates as a universal asynchronous receiver and transmitter (UART) in three full-duplex modes (modes 1, 2, and 3). Asynchronous transmission and reception can occur simultaneously and at different baud rates.

Mode 1 and 3 operate over a wide range of baud rates, which are generated by timer 1 and timer 2.

The serial port signals are defined in Table of Serial Port Signals, and the serial port special function registers (SBUF, SCON) are described in the section of Special Function Registers.

For the three asynchronous modes, the UART transmits on the TXD pin and receives on the RXD pin. The SBUF register, which holds received bytes and bytes to be transmitted, actually consists of two physically different registers. To send, software writes a byte to SBUF; to receive, software reads SBUF. The receive shift register allows reception of a second byte before the byte has been read from SBUF. However, if software has not read the first byte by the time the second byte is received, the second byte will overwrite the first. The UART sets interrupt bits TI and RI on transmission and reception respectively. These two bits share a single interrupt request and interrupt vector.

Figure 7-11. Serial Port Block Diagram

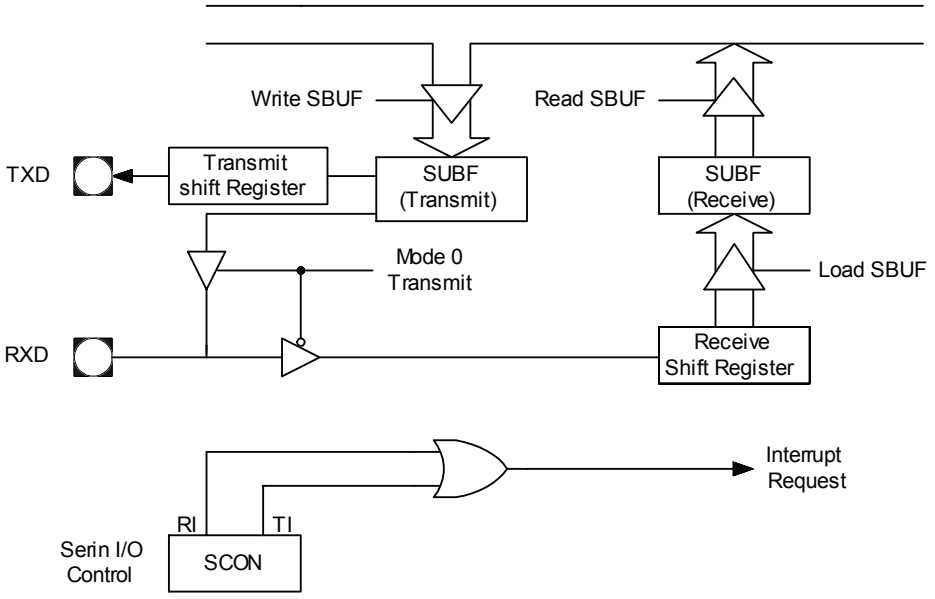

Table 7-4. Serial Port Signals

Function Name	Type	Description	Multiplexed With
TXD	O	Transmit Data. In mode 0, TXD transmits the clock signal. In modes 1, 2, and 3, TXD transmits serial data.	P3.1
RXD	I/O	Receive Data. In mode 0, RXD transmits and receives serial data. In mode 1, 2, and 3, RXD receives serial data.	P3.0

Asynchronous Modes (Modes 1, 2, and 3)
The serial port has three asynchronous modes of operation.

Mode 1
Mode 1 is a full-duplex and asynchronous mode. The data frame consists of 10 bits: one start bit, eight data bits, and one stop bit. Serial data is transmitted on the TXD pin and received on the RXD pin. When a message is received, the stop bit is read in the RB8 bit in the SCON register. The baud rate is generated by overflow of timer 1 or timer 2.

Mode 2 and 3
Mode 2 and 3 are full-duplex and asynchronous modes. The data frame consists of 11 bits: one start bit, eight data bits (transmitted and received LSB first), one programmable ninth data bit, and one stop bit which is read from the RB8 bit in the SCON register. On transmit, the ninth data bit is written to the TB8 bit in the SCON register. Alternatively, you can use the ninth bit as a command/data flag.
- In mode 2, the baud rate is programmable to 1/32 or 1/64 of the oscillator frequency.
- In mode 3, the baud rate is generated by overflow of timer 1 or timer 2.

Figure 7-12. Data Frame (Mode 1, 2 and 3)

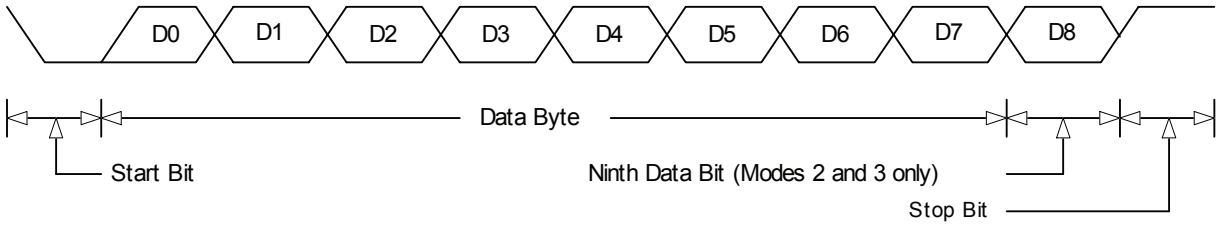

Transmission (Mode 1, 2, 3)
Follow these steps below to initiate a transmission:
1. Write to the SCON register. Select the mode with the SM0 and SM1 bits, and clear the REN bit.
For mode 2 and 3, write the ninth bit to the TB8 bit.
2. Write the byte to be transmitted to the SBUF register. This write starts the transmission.

Reception (Mode 1, 2, 3)
To prepare for a reception, set the REN bit in the SCON register. The actual reception is then initiated by a detected high-to-low transition on the RXD pin.

Baud Rates

Baud Rates for Mode 2
Mode 2 has a two-baud rate, which is selected by the SMOD bit in the PCON register. The following expression defines the baud rate:
Serial I/O Mode 2 Baud Rate = (2 ^ SMOD) x (8032_Freq / 64)
8032_Freq equals to EC Clock Frequency (listed in Table 10-1 on page 299).

Baud Rates for Mode 1 and 3
In mode 1 and 3, the baud rate is generated by overflow of timer (default) and/or timer 2. You may select either or both timers to generate the baud rate(s) for the transmitter and/or the receiver.

Timer 1 Generated Baud Rates (Mode 1 and 3)
Timer 1 is the default baud rate generator for the transmitter and the receiver in mode 1 and 3. The baud rate is determined by the timer 1 overflow rate and the value of SMOD, as shown in the following formula:
Serial I/O Mode 1 and 3 Baud Rate = (2 ^ SMOD) x (Timer 1 Overflow Rate) / 32

Selecting Timer 1 as the Baud Rate Generator
To select timer 1 as the baud rate generator:
• Disable the timer interrupt by clearing the IE0 register.
• Configure timer 1 as a timer or an event counter (set or clear the C/T bit in the TMOD register).
Serial I/O Mode 1 and 3 Baud Rate = (2 ^ SMOD) x 8032_Freq / (32 x 12 x (256 – TH1))

Note: 8032_Freq equals to EC Clock Frequency (listed in Table 10-1 on page 299).

• Select timer mode 0-3 by programming the M1 and M0 bits in the TMOD register.
In most applications, timer 1 is configured as a timer in auto-reload mode (high nibble of TMOD = 0010B). The resulting baud rate is defined by the following expression:
Timer 1 can generate very low baud rates by the following setups:
• Enable the timer 1 interrupt by setting the ET1 bit in the IE register.
• Configure timer 1 to run as a 16-bit timer (high nibble of TMOD = 0001B).
• Use the timer 1 interrupt to initiate a 16-bit software reload.

Timer 2 Generated Baud Rates (Mode 1 and 3)

Timer 2 may be selected as the baud rate generator for the transmitter and/or receiver. The baud rate generator mode of timer 2 is similar to the auto-reload mode. A rollover in the TH2 register reloads registers TH2 and TL2 with the 16-bit value on registers RCAP2H and RCAP2L, which are presented by software.
The baud rate of timer 2 is expressed by the following formula:
Serial I/O Mode 1 and 3 Baud Rate = (Timer 2 Overflow Rate) / 16

Selecting Timer 2 as the Baud Rate Generator

To select timer 2 as the baud rate generator for the transmitter and/or receiver, program the RCLCK and TCLCK bits in the T2CON register. Setting RCLK and/or TCLK puts timer 2 into its baud rate generator mode. In this mode, a rollover in the TH2 register does not set the TF2 bit in the T2CON register. Besides, a high-to-low transition at the T2EX input signal sets the EXF2 bit in the T2CON register but does not cause a reload from (RCAP2H, RCAP2L) to (TH2, TL2). You can use the T2EX input signal as an additional external interrupt by setting the EXEN2 bit in T2CON.

Note: T2EX is tied to logic high and is not available in IT8512.
Note: Turn off the timer (clear the TR2 bit in the T2CON register) before accessing registers TH2, TL2, CAP2H and RCAP2L. You may configure timer 2 as a timer or a counter. In most applications, it is configured for timer operation (i.e., the C/T2 bit is cleared in the T2CON register).

Table 7-5. Selecting the Baud Rate Generator(s)

RCLK Bit	TCLCK Bit	Receiver Baud Rate Generator	Transmit ter Baud Rate generator
00		Timer 1	Timer 1
01		Timer 1	Timer 2
10		Timer 2	Timer 1
11		Timer 2	Timer 2

Figure 7-13. Timer 2 in Baud Rate Generator Mode

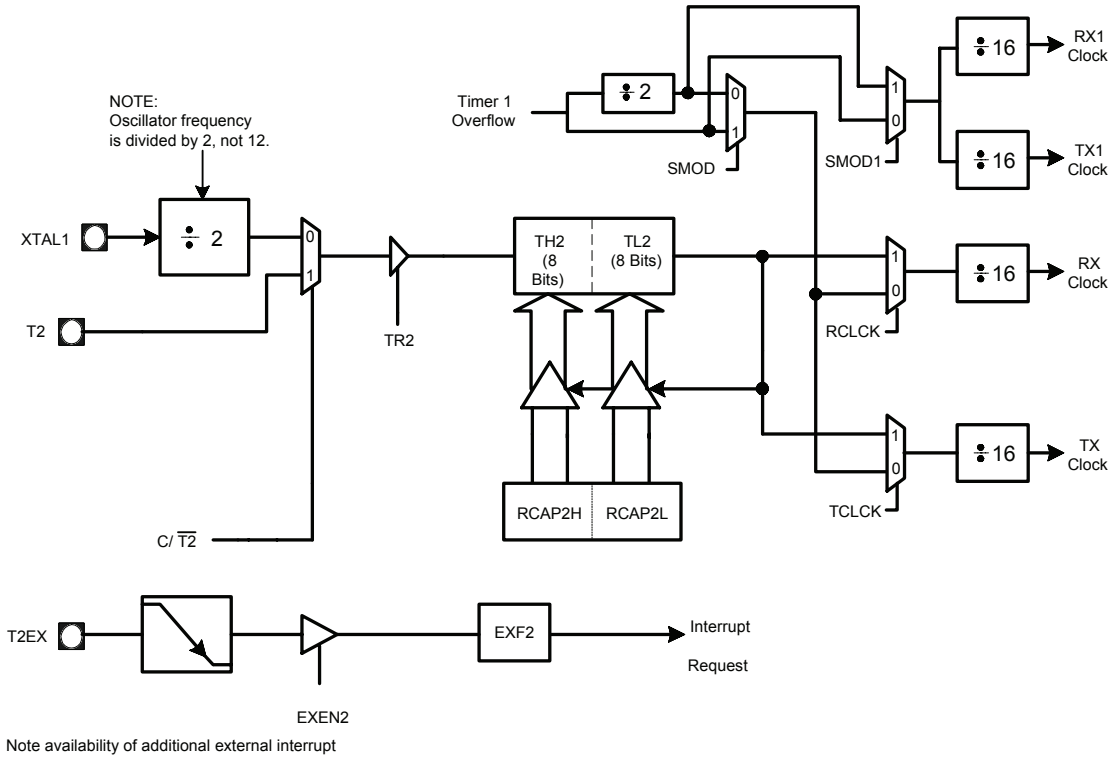

Note: T2EX is tied to logic high and is not available in IT8512.

Note that timer 2 increments every state time (2Tosc) when it is in the baud rate generator mode. In the baud rate formula that follows, “RCAP2H, RCAP2L” denoting the contents of RCAP2H and RCAP2L is taken as a 16-bit unsigned integer:
Serial I/O Mode 1 and 3 Baud Rate = 8032_Freq x (32 X [65536 - (RCAP2H,RACAP2L)])

Note: 8032_Freq equals to EC Clock Frequency (listed in Table 10-1 on page 299).

When timer 2 is configured as a timer and is in baud rate generator mode, do not read or write the TH2 or TL2 registers. The timer is being incremented every state time, and the result of a read or write may not be accurate. In addition, you may read but not write to the RCAP2 registers; a write may overlap a reload and cause write and/or reload errors.

7.1.8 Idle and Doze/Sleep Mode

Idle Mode
When set IDL bit in PCON(87h), the 8032 will enter an Idle mode. In the Idle mode, the 8032 is idle while all the on-chip peripherals remain active. The internal RAM and SFRs registers remain unchanged during this mode. The Idle mode can be terminated by any enabled internal/external interrupt or by a hardware reset.

Doze/Sleep Mode
When PD bit is set in PCON(87h), the 8032 will enter a Doze/Sleep mode. In the Doze/Sleep mode, the 8032 clock is stopped, and PLL may be alive or stopped depending on PLLCTRL. The Doze/Sleep mode can be waked up by the hardware reset or by the external enabled interrupt with level trigger activation (ITx in register TCON is set to 0). The Program Counter, internal RAM and SFRs registers retain their values and will not be changed after the exiting Doze/Sleep mode by external interrupt. The reset will restart the 8032, while the SFRs with initial values and the internal RAM retain their values.

7.1.9 EC Internal Register Description

The embedded 8032 internal memory space and special function registers (F0h-80h) are listed below.

Table 7-6. Internal RAM Map

7							0	Index
Bank 0								7h-0h
Bank 1								Fh-8h
Bank 2								17h-10h
Bank 3								1Fh-18h
Addressable Bits								2Fh-20h
General Purpose RAM								7Fh-2Fh
Indirect Addressing Register								FFh-80h

7							0	SFR Index
PCON	DPS	DPH1	DPL1	DPH	DPL	SP	P0	80h
	CKCON	TH1	TH0	TL1	TL0	TMOD	TCON	88h
							P1	90h
						SBUF	SCON	98h
							P2	A0h
							IE	A8h
							P3	B0h
							IP	B8h
		STATUS						C0h
		TH2	TL2	RCAP2H	RCAP2L	T2MOD	T2CON	C8h
							PSW	D0h
							WDTCON	D8h
							ACC	E0h
								E8h
MPREFC							B	F0h
								F8h

7.1.9.1 Port 0 Register (P0R)

Address: 80h

Bit	R/W	Default	Description
7-0	R/W	FFh	**P0 Register Bit [7:0] (P0)** This is the 8-bit 8032 port 0.

7.1.9.2 Stack Pointer Register (SPR)

Address: 81h

Bit	R/W	Default	Description
7-0	R/W	07h	**Stack Pointer Bit [7:0] (SP)** This is the 8-bit stack pointer.

7.1.9.3 Data Pointer Low Register (DPLR)

Address: 82h

Bit	R/W	Default	Description
7-0	R/W	0h	**Data Pointer Low Bit [7:0] (DPL)** This is the 8-bit data pointer low byte.

7.1.9.4 Data Pointer High Register (DPHR)

Address: 83h

Bit	R/W	Default	Description
7-0	R/W	0h	**Data Pointer High Bit [7:0] (DPH)** This is the 8-bit data pointer high byte.

7.1.9.5 Data Pointer 1 Low Register (DP1LR)

Address: 84h

Bit	R/W	Default	Description
7-0	R/W	0h	**Data Pointer 1 Low Bit [7:0] (DPL1)** This is the 8-bit data pointer 1 low byte.

7.1.9.6 Data Pointer 1 High Register (DP1HR)

Address: 85h

Bit	R/W	Default	Description
7-0	R/W	0h	**Data Pointer 1 High Bit [7:0] (DPH1)** This is the 8-bit data pointer 1 high byte.

7.1.9.7 Data Pointer Select Register (DPSR)

Address: 86h

Bit	R/W	Default	Description
7-1	-	0h	**Reserved**
0	R/W	0h	**Data Pointer Select (DPS)** Setting '1' selects the data pointer 1 (DPL1, DPH1) while setting '0' selects the data pointer (DPL, DPH).

7.1.9.8 Power Control Register (PCON)

Address: 87h

Bit	R/W	Default	Description
7	R/W	0h	**Serial Port Double Baud Rate (SMOD1)** Setting '1' doubles the baud rate when timer 1 is used and mode 1, 2, or 3 is selected in SCON register.
6	-	0h	**Reserved**
5-2	-	0h	**Reserved**
1	R/W	0h	**Power Down Mode (PD)** Set "1" to enter a Sleep (a.k.a power-down) or Doze mode immediately. The Sleep or Doze mode is controlled by PPDC bit. Exit Sleep or Doze mode and clear this bit by external interrupt or hardware reset.
0	R/W	0h	**Idle Mode (IDL)** Set "1" to enter idle mode immediately. Exit idle mode and clear this bit by internal interrupt and external interrupt or hardware reset.

7.1.9.9 Timer Control Register (TCON)

Address: 88h

Bit	R/W	Default	Description
7	R/W	0h	**Timer 1 Overflow (TF1)** This bit is set by hardware when timer 1 register overflows. This bit is cleared by hardware when the processor vectors to the interrupt service routine.
6	R/W	0h	**Timer 1 Run Control (TR1)** Setting '1' enables timer 1 operation and setting '0' disables timer 1.
5	R/W	0h	**Timer 0 Overflow (TF0)** This bit is set by hardware when timer 0 register overflows. This bit is cleared by hardware when the processor vectors to the interrupt service routine.
4	R/W	0h	**Timer 0 Run Control (TR0)** Setting '1' enables timer 0 operation and setting '0' disables the timer 0.
3	R/W	0h	**Interrupt 1 Edge Detect (IE1)** This bit is set by hardware when an edge or a level is detected on external INT1 (depends on the setting of **IT1**). This bit is cleared by hardware when the interrupt service routine is processed if an edge trigger is selected.
2	R/W	0h	**Interrupt 1 Type Select (IT1)** Setting '1' selects the edge-triggered for INT1. Setting '0' selects a level-triggered. Don't write 1 to this bit because interrupt triggered type is considered in INTC module and needs IT0 and IT1 to be set as level-low triggered.
1	R/W	0h	**Interrupt 0 Edge Detect (IE0)** Set by hardware when an edge or a level is detected on external INT0 (depends on the setting of **IT0**). Cleared by hardware when the interrupt service routine is processed if an edge trigger is selected.
0	R/W	0h	**Interrupt 0 Type Select (IT0)** Setting '1' selects the edge-triggered for INT0. Setting '0' selects a level-triggered. Don't write 1 to this bit because interrupt triggered type is considered in INTC module and needs IT0 and IT1 to be set as level-low triggered.

7.1.9.10 Timer Mode Register (TMOD)

Address: 89h

Bit	R/W	Default	Description
7	R/W	0h	**Timer 1 Gate (GATE1)** 0: Timer 1 will clock when **TR1**=1, regardless of the state of INT1. 1: Timer 1 will clock only when **TR1**=1 and INT1 is deasserted.
6	R/W	0h	**Timer 1 Source (SRC1)** 0: timer 1 counts the divided-down EC clock. 1: timer 1 counts negative transitions on T1 input of 8032 from TMRI0 pin.
5-4	R/W	0h	**Timer 1 Mode (MODE1)** 0h: 8-bit timer/counter (TH1) with 5-bit prescaler (TL1) 1h: 16-bit timer/counter 2h: 8-bit auto-reload timer/counter (TL1). Reload from TH1 at overflow. 3h: timer 1 halted. Retains count.
3	R/W	0h	**Timer 0 Gate (GATE0)** 0: Timer 0 will clock when TR0=1, regardless of the state of INT0. 1: Timer 0 will clock only when TR0=1 and INT0 is deasserted.
2	R/W	0h	**Timer 0 Source (SRC0)** 0: timer 0 counts the divided-down EC clock. 1: timer 0 counts negative transitions on T0 input of 8032 from GPE5.
1-0	R/W	0h	**Timer 0 Mode (MODE0)** 0h: 8-bit timer/counter (TH0) with 5-bit prescaler (TL0) 1h: 16-bit timer/counter 2h: 8-bit auto-reload timer/counter (TL0). Reload from TH0 at overflow. 3h: timer 0 halted. Retains count.

7.1.9.11 Timer 0 Low Byte Register (TL0R)

Address: 8Ah

Bit	R/W	Default	Description
7-0	R/W	0h	**Timer 0 Low Byte Bit [7:0] (TL0)** Timer 0 low byte register.

7.1.9.12 Timer 1 Low Byte Register (TL1R)

Address: 8Bh

Bit	R/W	Default	Description
7-0	R/W	0h	**Timer 1 Low Byte Bit [7:0] (TL1)** Timer 1 low byte register.

7.1.9.13 Timer 0 High Byte Register (TH0R)

Address: 8Ch

Bit	R/W	Default	Description
7-0	R/W	0h	**Timer 0 High Byte Bit [7:0] (TH0)** Timer 0 high byte register.

7.1.9.14 Timer 1 Low Byte Register (TH1R)

Address: 8Dh

Bit	R/W	Default	Description
7-0	R/W	0h	**Timer 1 High Byte Bit [7:0] (TH1)** Timer 1 high byte register.

7.1.9.15 Clock Control Register (CKCON)

Address: 8Eh

Bit	R/W	Default	Description
7-6	R/W	0h	**Watch Dog Time Out Counter Select (WD[1:0])** 0h: 17-bit counter 1h: 20-bit counter 2h: (56/63)*2^{23} counter 3h: 26-bit counter
5	R/W	0h	**Timer 2 Clock (T2M)** 0: timer 2 clock is EC clock / 12. 1: timer 2 clock is EC clock / 4.
4	R/W	0h	**Timer 1 Clock (T1M)** 0: timer 1 clock is EC clock / 12. 1: timer 1 clock is EC clock / 4.
3	R/W	0h	**Timer 0 clock (T0M)** 0: timer 0 clock is EC clock / 12. 1: timer 0 clock is EC clock / 4.
2-0	-	-	**Reserved**

7.1.9.16 Port 1 Register (P1R)

Address: 90h

Bit	R/W	Default	Description
7-0	R/W	FFh	**P1 Register Bit [7:0] (P1)** This is the 8-bit 8032 port 1.

7.1.9.17 Serial Port Control Register (SCON)

Address: 98h

Bit	R/W	Default	Description
7	R/W	0h	**Serial Port Mode 0 (SM0_0)** Serial port mode control is set/cleared by software. Mode 1-3 are supported.
6	R/W	0h	**Serial Port Mode 1 (SM1_0)** Serial port mode control is set/cleared by software. Mode 1-3 are supported.
5	-	0h	**Reserved**
4	R/W	0h	**Receive Enable (REN)** Receiver enable bit. Setting '1' enables the serial data reception. Setting '0' disables the serial data reception.
3	R/W	0h	**Transmit Bit 8 (TB8)** Transmit bit 8, set/cleared by hardware to determine the state of the ninth data bit transmitted in 9-bit UART mode.
2	R/W	0h	**Receive Bit 8 (RB8)** Receive bit 8, set/cleared by hardware to determine the state of the ninth data bit received in 9-bit UART mode.
1	R/W	0h	**Transmit Interrupt (TI)** Transmit interrupt, set by hardware when the byte is transmitted and cleared by software after serving.
0	R/W	0h	**Receive Interrupt (RI)** Receive interrupt, set by hardware when the byte is received and cleared by software when data is processed.

7.1.9.18 Serial Port Buffer Register (SBUFR)

Address: 99h

Bit	R/W	Default	Description
7-0	R/W	0h	**Serial Port Buffer Bit [7:0] (SBUF)** This is the 8-bit 8032 serial port data buffer. Writing to **SBUF** loads the transmit buffer to the serial I/O port. Reading **SBUF** reads the receive buffer of the serial port.

7.1.9.19 Port 2 Register (P2R)

Address: A0h

Bit	R/W	Default	Description
7-0	R/W	FFh	**P2 Register Bit [7:0] (P2)** This is the 8-bit 8032 port 2.

7.1.9.20 Interrupt Enable Register (IE)

Address: A8h

Bit	R/W	Default	Description
7	R/W	0h	**Global Interrupt Enable (EA)** Setting this bit enables all interrupts that are individually enabled by bit 0-6. Clearing this bit disables all interrupts.
6	R/W	0h	**Serial Port 1 Interrupt Enable (ES1)** Setting this bit enables the serial port 1 interrupt.
5	R/W	0h	**Timer 2 Overflow Interrupt Enable (ET2)** Setting this bit enables the timer 2 overflow interrupt.
4	R/W	0h	**Serial Port 0 Interrupt Enable (ES0)** Setting this bit enables the serial port 0 interrupt.
3	R/W	0h	**Timer 1 Overflow Interrupt Enable (ET1)** Setting this bit enables the timer 1 overflow interrupt.
2	R/W	0h	**External Interrupt 1 Enable (EX1)** Setting this bit enables the external interrupt 1.
1	R/W	0h	**Timer01 Overflow Interrupt Enable (ET0)** Setting this bit enables the timer 0 overflow interrupt.
0	R/W	0h	**External Interrupt 0 Enable (EX0)** Setting this bit enables the external interrupt 0.

7.1.9.21 Port 3 Register (P3R)

Address: B0h

Bit	R/W	Default	Description
7-0	R/W	FFh	**P3 Register Bit [7:0] (P3)** This is the 8-bit 8032 port 3.

7.1.9.22 Interrupt Priority Register (IP)

Address: B8h

Bit	R/W	Default	Description
7	-	0h	**Reserved**
6	-	-	**Reserved**
5	R/W	0h	**Timer 2 Overflow Interrupt Priority (PT2)** Setting this bit enables the timer 2 overflow interrupt.
4	R/W	0h	**Serial Port 0 Interrupt Priority (PS0)** Setting this bit enables the serial port 0 interrupt.
3	R/W	0h	**Timer 1 Overflow Interrupt Priority (PT1)** Setting this bit enables the timer 1 overflow interrupt.
2	R/W	0h	**External Interrupt 1 Priority (PX1)** Setting this bit enables the external interrupt 1.
1	R/W	0h	**Timer01 Overflow Interrupt Priority (PT0)** Setting this bit enables the timer 0 overflow interrupt.
0	R/W	0h	**External Interrupt 0 Priority (PX0)** Setting this bit enables the external interrupt 0.

7.1.9.23 Status Register (STATUS)

Address: C5h

Bit	R/W	Default	Description
7	-	0b	**Reserved**
6	R/W	0b	**High priority interrupt status (HIP)**
5	R/W	0b	**Low priority interrupt status (LIP)**
4-2	-	0h	**Reserved**
1	R/W	0b	**Serial Port 0 Transmit Activity Monitor (SPTA0)**
0	R/W	0b	**Serial Port 0 Receive Activity Monitor (SPRA0)**

7.1.9.24 Timer 2 Control Register (T2CON)

Address: C8h

Bit	R/W	Default	Description
7	R/W	0h	**Timer 2 Overflow (TF2)** Set by hardware when the timer 2 overflows. It must be cleared by software. TF2 is not set if RCLK=1 or TCLK=1.
6	R/W	0h	**Timer 2 External Flag (EXF2)** If EXEN2=1, a capture or reload is caused by a negative transition on T2EX sets EFX2. EFX2 dose not cause an interrupt in up/down counter mode (DCEN=1).
5	R/W	0h	**Receive Clock (RCLK)** Selects timer 2 overflow pulses (RCLK=1) or timer 1 overflow pulses (RCLK=0) as the baud rate generator for port mode 1 and 3.
4	R/W	0h	**Receive Clock (RCLK)** Selects timer 2 overflow pulses (TCLK=1) or timer 1 overflow pulses (TCLK=0) as the baud rate generator for port mode 1 and 3.
3	R/W	0h	**Timer 2 External Enable (EXEN2)** Setting EXEN2 causes a capture or reload to occur as a result of a negative transition on T2EX unless timer 2 is being used as the baud rate generator for the serial port. Clearing EXEN2 causes timer 2 to ignore events at T2EX.
2	R/W	0h	**Timer 2 Run Control (TR2)** Setting this bit starts the timer.
1	R/W	0h	**Timer/Counter 2 Select (CT2)** 0: timer 2 counts the divided-down EC clock. 1: timer 2 counts negative transitions on T2 input of 8032 from TMRI1 pin.
0	R/W	0h	**Capture/Reload (CPRL2)** When this bit is set, captures occur on negative transitions at T2EX if EXEN2=1. When reloads occur o if EXEN2=1, the CP/ 2 RL bit is ignored and timer 2 is forced to auto-reload on timer 2 overflow if RCLK =1 or TCLK = 1.

7.1.9.25 Timer Mode Register (T2MOD)

Address: C9h

Bit	R/W	Default	Description
7-2	-	0h	**Reserved**
1	R/W	0h	**Timer 2 Output Enable (T2OE)** In the timer 2 clock-out mode, this bit connects the programmable clock output to External signal T2.
0	R/W	0h	**Down Count Enable (DCEN)** This bit configures timer 2 as an up/down counter.

7.1.9.26 Timer 2 Capture Low Byte Register (RCAP2LR)

Address: CAh

Bit	R/W	Default	Description
7-0	R/W	0h	**Timer 2 Capture Low Byte Bit [7:0] (RCAP2L)** Low byte of the timer2 reload/recapture register. This register stores 8-bit value to be loaded into or captured from the timer register TL2 in timer 2.

7.1.9.27 Timer 2 Capture High Byte Register (RCAP2HR)

Address: CBh

Bit	R/W	Default	Description
7-0	R/W	0h	**Timer 2 Capture High Byte Bit [7:0] (RCAP2H)** High byte of the timer2 reload/recapture register. This register stores 8-bit value to be loaded into or captured from the timer register TH2 in timer 2.

7.1.9.28 Timer 2 Low Byte Register (TL2R)

Address: CCh

Bit	R/W	Default	Description
7-0	R/W	0h	**Timer 2 Low Byte Bit [7:0] (TL2)** Timer 2 low byte register.

7.1.9.29 Timer 2 High Byte Register (TH2R)

Address: CDh

Bit	R/W	Default	Description
7-0	R/W	0h	**Timer 2 High Byte Bit [7:0] (TH2)** Timer 2 high byte register.

7.1.9.30 Program Status Word Register (PSW)

Address: D0h

Bit	R/W	Default	Description
7	R/W	0h	**Carry Flag (CF)** CY is set if the operation result in a carry out of (during addition) or a borrow into (during subtraction) the high-order bit of the result; otherwise CY is cleared.
6	R/W	0h	**Auxilary Carry Flag (AC)** AC is set if the operation result in a carry out of the low-order 4 bits of the result (during addition) or a borrow form the high-order bits into the low-order 4 bits (during subtraction); otherwise AC is cleared.
5	R/W	0h	**User Flag 0 (F0)** General-purpose flag.
4-3	R/W	0h	**Register Bank Select Bit [1:0](RS1:0)** 0h: bank 0, 00h-07h 1h: bank 1, 08h-0Fh 2h: bank 2, 10h-17h 3h: bank 3, 18h-1Fh
2	R/W	0h	**Overflow Flag (OV)** This bit is set if an addition or signed variables result in an overflow error (i.e., if the magnitude of the sum or difference is too great for the seven LSBs in 2's – complement representation). The overflow flag is also set if the multiplication product overflows one byte or if a division by zero is attempted.
1	R/W	0h	**User Defined Flag (UD)** General-purpose flag.
0	R/W	0h	**Parity Flag (P)** This bit indicates the parity of the accumulator. It is set if an odd number of bits in the accumulator is set. Otherwise, it is cleared. Not all instructions update the parity bit. The parity bit is set or cleared by instructions that change the contents to the accumulator.

7.1.9.31 Watch Dog Timer Control Register (WDTCON)

Address: D8h

Bit	R/W	Default	Description
7	-	0h	**Reserved**
6-2	-	0h	**Reserved**
1	R/W	0h	**Watch Dog Timer Enable (WDTEN)** Setting '1' enables the watchdog timer.
0	R/W	0h	**Watch Dog Timer Reset (WDTRST)** Setting '1' resets the watchdog timer.

7.1.9.32 Accumulator Register (ACC)

Address: E0h

Bit	R/W	Default	Description
7-0	R/W	0h	**Accumulator Bit [7:0] (ACC[7:0])** The instruction uses the accumulator as both source and destination for calculations and moves.

7.1.9.33 B Register (BR)

Address: F0h

Bit	R/W	Default	Description
7-0	-	0h	**B Register (B[7:0])** The B Register is used as both a source and destination in multiply and divide operations.

7.1.9.34 Manual Prefetch Register (MPREFC)

Address: F7h

Bit	R/W	Default	Description
7-6	-	-	**Reserved**
5-0	W	-	**Manually Prefetch Count (MPREFCN)** This register is dedicated to clear internal dynamic caches. Refer to section 7.1.10.6 Code snippet of Clearing Dynamic Caches on page 153.

7.1.10 Programming Guide

7.1.10.1 IT8512 Coding Consideration

Coding consideration is to speed up the 8032 code-fetch performance while fetching from LPC/FWH/serial flash. There are some recommendations for coding consideration.

- If a code section is usually fetched, consider shadowing it to Scratch SRAM or let it be recognized by on-chip cache mechanism.
- Consider grouping usual fetched code and link them as a consecutive address in a code section, then shadow them to Scratch SRAM.
- The number of shadowed code sections are up five sections in different size and totally 4096 bytes. Also consider re-shadow different code sections while servicing different events.
- The on-chip cache mechanism automatically recognize a loop which is constructed with “CJNE” or “DJNZ” instruction.
- If a function contains only few bytes, consider replacing it with macro function.
- R8032TT code-fetch frequency is variable while fetching from LPC/FWH/serial flash. A delay routine which is formed by a loop routine can have a known delay time even code-fetch frequency is variable since the loop is fetched from loop or not. A delay routine can be implemented by WNCKR register. However, this is a simple way.

7.1.10.2 Code Snippet of Entering Idle/Doze/Sleep Mode

```
; Power-down ADC/DAC analog circuit
; Enter No-wait mode before entering power saving mode
; Disable unnecessary channel of INTC/WUC

mov     dptr, #1e03h        ; PLLCTRL register
mov     a, #01h             ; 00h for Doze mode
                            ; 01h for Sleep mode
movx    @dptr, a

nop                         ; Reserved
orl     pcon, #01h          ; #01h for Idle mode
                            ; #02h for Doze/Sleep mode

; Repeat "nop" eight times immediately
; for internal bus turn-around
nop                         ; 1st
nop                         ; 2nd
nop                         ; 3rd
nop                         ; 4th
nop                         ; 5th
nop                         ; 6th
nop                         ; 7th
nop                         ; 8th
```

7.1.10.3 Code snippet of Copying Flash Content to Scratch ROM 4 (MOVC-MOVX by PIO)

```
        ; First copy data from code space to Scratch RAM in data space,
        ; then enable code space mapping of Scratch ROM

        ; copy 256 bytes from code space to scratch RAM
        ;   code space: ff00h ~ ffffh (byte)
        ;   data space: 0700h ~ 07ffh (byte)

        mov     r6, #00h
copy_loop:
        mov     dptr, #0ff00h           ; read from code space from ff00h (byte)
        mov     a, r6
        movc    a,  @a+dptr
        mov     dph, #07h               ; write to  data space from 0700h (byte)
        mov     dpl, r6
        movx    @dptr, a

        inc     r6
        cjne    r6, #00h, copy_loop     ; copy 256 bytes

        ; enable mapping Scratch SRAM to Scratch ROM
        mov     dptr, #104Eh            ; SCAR4H register
        mov     a, #03h                 ; disable code space mapping first
        movx    @dptr, a

        mov     dptr, #104Ch            ; SCAR4L register
        mov     a, #00h                 ;
        movx    @dptr, a

        mov     dptr, #104Dh            ; SCAR4 register
        mov     a, #0ffh                ;
        movx    @dptr, a

        mov     dptr, #104Eh            ; SCAR4H register
        mov     a, #00h                 ;
        movx    @dptr, a                ; enable code space mapping
```

7.1.10.4 Code snippet of Copying Flash Content to Scratch ROM (DMA)

```
        ; DMA copies256 bytes from code space to scratch RAM then
        ;   enable code space mapping
        ;
        ;   code space: ff00h ~ ffffh (byte)
        ;   data space: 0700h ~ 07ffh (byte)

        mov     dptr, #104Eh        ; SCAR4H register
        mov     a, #80h             ;
        movx    @dptr, a

        mov     dptr, #104Ch        ; SCAR4L register
        mov     a, #00h             ;
        movx    @dptr, a

        mov     dptr, #104Dh        ; SCAR4 register
        mov     a, #0ffh            ;
        movx    @dptr, a

        mov     dptr, #104Eh        ; SCAR4H register
        mov     a, #00h             ;
        movx    @dptr, a            ; start DMA then enable code space mapping
```

7.1.10.5 Code snippet of Changing PLL Frequency

```
        mov     b,#07h              ; let reg. b = new PLLFREQR value
        mov     dptr,#1e06h         ; PLLFREQR reg. addr
        movx    a,@dptr             ; check whether PLLFREQR value
        cjne    a,b,pll_chgfreq     ;
        sjmp    bypass_pll_chgfreq

pll_chgfreq:
        xch     a,b
        movx    @dptr,a             ;    modify PLLFREQR reg.

        mov     dptr,#1e03h         ; PLLCTRL reg. addr.
        mov     a,#01h              ; 1: Sleep mode; 0: Doze mode
        movx    @dptr,a             ;    modify PLLCTRL reg.

        clr     ea                  ; intentionally clear EA
        orl     pcon,#02h           ; enter Sleep mode then immediately
                                    ;   wakeup with new frequency
        nop
        nop
        nop
        nop
        nop
        nop
        nop
        nop

bypass_pll_chgfreq:
        .....
```

7.1.10.6 Code snippet of Clearing Dynamic Caches

```
; after flash is modified by the host program, the dynamic caches must be
; cleared since they contain old and invalid cache content
; uC should execute these lines if the program counter leaves Scratch ROM

mov     0f7h, #01h ; MPREFC reg
nop
mov     0f7h, #01h ; MPREFC reg
nop
mov     0f7h, #01h ; MPREFC reg
nop
mov     0f7h, #01h ; MPREFC reg
nop
```

7.2 Interrupt Controller (INTC)

7.2.1 Overview

INTC mainly collects several interrupts from modules. Using interrupt driven design has a better performance than polling-driven.

It traps PWRFAIL#, ROM match interrupt and samples 31 interrupt channels, then outputs to the INT0# and INT1# of 8032.

Both interrupts INT0# and INT1# to 8032 are generated by INTC, and don't write 1 to IT0 and IT1 bit in TCON because interrupt triggered type is considered in INTC and needs IT0 and IT1 to be set as level-low triggered.

Note INT0# and INT1# are external interrupts of 8032 and they are controlled by EA, EX0 and EX1 in IE register.

External interrupts can wakeup 8032 from Idle/Doze/Sleep mode, but internal interrupts can wakeup 8032 from Idle mode only.

7.2.2 Features

- Configurable level-triggered and edge-triggered mode
- Configurable interrupt polarity of triggered mode
- Clear registers for edge-triggered interrupts
- Each interrupt source can be enabled/masked individually
- Special handler for power-fail (INT0# of 8032)

7.2.3 Functional Description

7.2.3.1 Power Fail Interrupt

The INTC collects interrupts sources from internal and external (through WUC) and provides two interrupt requests INT0# and INT1# to 8032. 8032 treats INT0# as a higher priority interrupt request than INT1#. INTC uses INT0# as a power-fail interrupt and INT1# as a maskable interrupt. The firmware should enable the IE0 and IE1 bit in TCON before all.

To implement a power-fail application, connect GPB7 to external circuit. Firmware puts the GPB7 in alternative function, enables the Smitter Trigger of GPB7 to receive an asynchronous external input, and provides relative INT0# interrupt routine.

There are two methods to trap a power-fail event: “Trap Enabled” and “Trap Enabled and Locked”. Users select “Trap Enabled” by setting TREN bit in PFAILR and select “Trap Enabled and Locked” by setting TRENL bit in PFAILR. If both bits are selected, TREN bit is ignored. If “Trap Enabled” is used, power-fail event is detected by falling edge transition of PWRFAIL#, and INT0# to 8032 is asserted. After INT0# is set, TREN bit is cleared. “Trap Enabled and Locked” method is similar to “Trap Enabled” method but TRENL will not be cleared after INT0# is set.

7.2.3.2 ROM Match Interrupt

Refer to section 7.18 Debugger (DBGR) on page 281.

7.2.3.3 Programmable Interrupts

INTC also collects 31 maskable interrupt sources and make a request on INT1 # of 8032 if triggered. Each channel can be individually enabled or masked by IERx. If an interrupt channel is masked and one interrupt request is triggered, the request is masked (inhibited, not canceled), and will be asserted the request on INT1# if it is enabled.

The ISRx indicates the status of interrupt regardless of IERx. In the level-triggered mode, ISRx is affected by corresponding interrupt sources, and firmware should clear the interrupt status on interrupt sources after its request is handled. In edge-triggered mode, ISRx is set by selected edge transition (determined by IELMRx) of corresponding interrupts sources, and firmware should write 1 to clear to ISRx after this request is handled.

Firmware may use the IVECT to determine which channel is to be serviced first or have its priority rule by reading ISRx and IERx. IVECT treats INT1 as the lowest priority interrupt and INT31 as the highest priority interrupt.

The 8032 always wakes up from Idle/Doze/Sleep mode when it detects an enabled external interrupt and it wakes up from Idle mode by internal interrupt, too. Firmware should disable unwanted interrupt sources to prevent from waking up unexpectedly.

Note that interrupts from WUC are not always level-triggered interrupts since they may be just throughout WUC if the corresponding channels at WUC are disabled (bypassed). If an edge-triggered passes through WUC and INTC with WUC corresponding channel is disabled and INTC corresponding channel is level-trig mode, it may cause 8032 interrupt routine called but finds no interrupt source to service, or it may cause 8032 to wake up from Idle/Doze/Sleep mode and enters interrupt routine but finds no interrupt source to service.

7.2.4 EC Interface Registers

The EC interface registers are listed below. The base address for INTC is 1100h.

Table 7-7. EC View Register Map, INTC

7	0	Offset
Interrupt Status Register 0 (ISR0)		00h
Interrupt Status Register 1 (ISR1)		01h
Interrupt Status Register 2 (ISR2)		02h
Interrupt Status Register 3 (ISR3)		03h
Interrupt Enable Register 0 (IER0)		04h
Interrupt Enable Register 1 (IER1)		05h
Interrupt Enable Register 2 (IER2)		06h
Interrupt Enable Register 3 (IER3)		07h
Interrupt Edge/Level-Triggered Mode Register 0 (IELMR0)		08h
Interrupt Edge/Level-Triggered Mode Register 1 (IELMR1)		09h
Interrupt Edge/Level-Triggered Mode Register 2 (IELMR2)		0Ah
Interrupt Edge/Level-Triggered Mode Register 3 (IELMR3)		0Bh
Interrupt Polarity Register 0 (IPOLR0)		0Ch
Interrupt Polarity Register 1 (IPOLR1)		0Dh
Interrupt Polarity Register 2 (IPOLR2)		0Eh
Interrupt Polarity Register 3 (IPOLR3)		0Fh
Interrupt Vector Register (IVECT)		10h
INT0# status (INT0ST)		11h
Power Fail Register (PFAILR)		12h

7.2.4.1 Interrupt Status Register 0 (ISR0)

This register indicates which maskable interrupts are pending regardless of the state of the corresponding IERx bits.

Address Offset: 00h

Bit	R/W	Default	Description
7-1	R/WC Or R	-	**Interrupt Status (IS7-1)** It indicates the interrupt input status of INTx. INTST7 to INTST1 correspond to INT7 to INT1 respectively. Each bit is R/WC if the corresponding bit in IELMRx register indicates edge-triggered mode, and is R if it indicates level-triggered mode. For each bit: Read 0: Interrupt input to INTC is not pending. Read 1: Interrupt input to INTC is pending. For each bit: Write 0: No action Write 1: Clear this bit when it is in the edge-triggered mode, and writing 1 is ignored when it is in the level-triggered mode.
0	R	0b	**Reserved**

7.2.4.2 Interrupt Status Register 1 (ISR1)

This register indicates which maskable interrupts are pending regardless of the state of the corresponding IERx bits.

Address Offset: 01h

Bit	R/W	Default	Description
7-0	R/WC Or R	-	**Interrupt Status (IS15-8)** It indicates the interrupt input status of INTx. INTST15 to INTST8 correspond to INT15 to INT8 respectively. Each bit is R/WC if the corresponding bit in IELMRx register indicates edge-triggered mode, and is R if it indicates level-triggered mode. For each bit: Read 0: Interrupt input to INTC is not pending. Read 1: Interrupt input to INTC is pending. For each bit: Write 0: No action Write 1: Clear this bit when it is in the edge-triggered mode, and writing 1 is ignored when it is in the level-triggered mode.

7.2.4.3 Interrupt Status Register 2 (ISR2)

This register indicates which maskable interrupts are pending regardless of the state of the corresponding IERx bits.

Address Offset: 02h

Bit	R/W	Default	Description
7-0	R/WC Or R	-	**Interrupt Status (IS23-16)** It indicates the interrupt input status of INTx. INTST23 to INTST16 correspond to INT23 to INT16 respectively. Each bit is R/WC if the corresponding bit in IELMRx register indicates edge-triggered mode, and is R if it indicates level-triggered mode. For each bit: Read 0: Interrupt input to INTC is not pending. Read 1: Interrupt input to INTC is pending. For each bit: Write 0: No action Write 1: Clear this bit when it is in the edge-triggered mode, and writing 1 is ignored when it is in the level-triggered mode.

7.2.4.4 Interrupt Status Register 3 (ISR3)

This register indicates which maskable interrupts are pending regardless of the state of the corresponding IERx bits.

Address Offset: 03h

Bit	R/W	Default	Description
7-0	R/WC Or R	-	**Interrupt Status (IS31-24)** It indicates the interrupt input status of INTx. INTST31 to INTST24 correspond to INT31 to INT24 respectively. Each bit is R/WC if the corresponding bit in IELMRx register indicates edge-triggered mode, and is R if it indicates level-triggered mode. For each bit: Read 0: Interrupt input to INTC is not pending. Read 1: Interrupt input to INTC is pending. For each bit: Write 0: No action Write 1: Clear this bit when it is in the edge-triggered mode, and writing 1 is ignored when it is in the level-triggered mode.

7.2.4.5 Interrupt Enable Register 0 (IER0)

Address Offset: 04h

Bit	R/W	Default	Description
7-1	R/W	0h	**Interrupt Enable (IE7-0)** Each bit determines the corresponding interrupt channel (INT7-0) is masked or enabled. Note that it has no effect on INT0 0: Masked 1: Enabled
0	-	0b	**Reserved**

7.2.4.6 Interrupt Enable Register 1 (IER1)

Address Offset: 05h

Bit	R/W	Default	Description
7-0	R/W	0h	**Interrupt Enable (IE15-8)** Each bit determines the corresponding interrupt channel (INT15-8) is masked or enabled. 0: Masked 1: Enabled.

7.2.4.7 Interrupt Enable Register 2 (IER2)

Address Offset: 06h

Bit	R/W	Default	Description
7-0	R/W	0h	**Interrupt Enable (IE23-16)** Each bit determines the corresponding interrupt channel (INT23-16) is masked or enabled. 0: Masked 1: Enabled

7.2.4.8 Interrupt Enable Register 3 (IER3)

Address Offset: 07h

Bit	R/W	Default	Description
7-0	R/W	0h	**Interrupt Enable (IE31-24)** Each bit determines the corresponding interrupt channel (INT31-24) is masked or enabled. 0: Masked 1: Enabled

7.2.4.9 Interrupt Edge/Level-Triggered Mode Register 0 (IELMR0)

It determines the corresponding interrupt channel is level-triggered or edge-triggered.

Address Offset: 08h

Bit	R/W	Default	Description
7-0	R/W	00010000b	**Interrupt Edge/Level-Triggered Mode (IELM7-0)** Each bit determines the triggered mode of the corresponding interrupt channel (INT7-0). 0: Level-triggered 1: Edge-triggered

7.2.4.10 Interrupt Edge/Level-Triggered Mode Register 1 (IELMR1)

It determines the corresponding interrupt channel is level triggered or edge-triggered.

Address Offset: 09h

Bit	R/W	Default	Description
7-0	R/W	0h	**Interrupt Edge/Level-Triggered Mode (IELM15-8)** Each bit determines the triggered mode of the corresponding interrupt channel (INT15-8). 0: Level-triggered 1: Edge-triggered

7.2.4.11 Interrupt Edge/Level-Triggered Mode Register 2 (IELMR2)

It determines the corresponding interrupt channel is level-triggered or edge-triggered.

Address Offset: 0Ah

Bit	R/W	Default	Description
7-0	R/W	00011100b	**Interrupt Edge/Level-Triggered Mode (IELM23-16)** Each bit determines the triggered mode of the corresponding interrupt channel (INT23-16). 0: level-triggered 1: edge-triggered

7.2.4.12 Interrupt Edge/Level-Triggered Mode Register 3 (IELMR3)

It determines the corresponding interrupt channel is level-triggered or edge-triggered.

Address Offset: 0Bh

Bit	R/W	Default	Description
7-0	R/W	01101100b	**Interrupt Edge/Level-Triggered Mode (IELM31-24)** Each bit determines the triggered mode of the corresponding interrupt channel (INT31-24). 0: level-triggered 1: edge-triggered

7.2.4.13 Interrupt Polarity Register 0 (IPOLR0)

For level-triggered interrupt, it determines this interrupt is level-high-triggered or level-low-triggered.
For edge-triggered interrupt, it determines this interrupt is rising-edge-triggered or falling-edge-triggered.

Address Offset: 0Ch

Bit	R/W	Default	Description
7-0	R/W	0h	**Interrupt Polarity (IPOL7-0)** Each bit determines the active high/low of the corresponding interrupt channel (INT7-0). 0: level-high-triggered or rising-edge-triggered 1: level-low-triggered or falling-edge-triggered

7.2.4.14 Interrupt Polarity Register 1 (IPOLR1)

For level-triggered interrupt, it determines this interrupt is level-high-triggered or level-low-triggered.
For edge-triggered interrupt, it determines this interrupt is rising-edge-triggered or falling-edge-triggered.

Address Offset: 0Dh

Bit	R/W	Default	Description
7-0	R/W	0h	**Interrupt Polarity (IPOL15-8)** Each bit determines the active high/low of the corresponding interrupt channel (INT15-8). 0: level-high-triggered or rising-edge-triggered 1: level-low-triggered or falling-edge-triggered

7.2.4.15 Interrupt Polarity Register 2 (IPOLR2)

For level-triggered interrupt, it determines this interrupt is level-high-triggered or level-low-triggered.
For edge-triggered interrupt, it determines this interrupt is rising-edge-triggered or falling-edge-triggered.

Address Offset: 0Eh

Bit	R/W	Default	Description
7-0	R/W	0h	**Interrupt Polarity (IPOL23-16)** Each bit determines the active high/low of the corresponding interrupt channel (INT23-16 0: level-high-triggered or rising-edge-triggered 1: level-low-triggered or falling-edge-triggered

7.2.4.16 Interrupt Polarity Register 3 (IPOLR3)

For level-triggered interrupt, it determines this interrupt is level-high-triggered or level-low-triggered.
For edge-triggered interrupt, it determines this interrupt is rising-edge-triggered or falling-edge-triggered.

Address Offset: 0Fh

Bit	R/W	Default	Description
7-0	R/W	0h	**Interrupt Polarity (IPOL31-24)** Each bit determines the active high/low of the corresponding interrupt channel (INT31-24). 0: level-high-triggered or rising-edge-triggered 1: level-low-triggered or falling-edge-triggered

7.2.4.17 Interrupt Vector Register (IVCT)

Address Offset: 10h

Bit	R/W	Default	Description
7-6	R	00b	**Reserved**
5-0	R	10000b	**Interrupt Vector (IVECT)** It contains the interrupt number, which is the highest priority, enabled and pending interrupt. The valid values range from 10h to 2Fh. Note that INT1 has the lowest priority and INT31 has the highest priority. If no enabled interrupt is pending, it returns 10h.

7.2.4.18 8032 INT0# Status (INT0ST)

INT0PF is set when falling edge transition of PWRFAIL# with TREN or TRENL bit in PFAILR is set, and it is clear when being reset or read its content.

INT0RM is set when the trigger address matches the 8032 program counter.

Address Offset: 11h

Bit	R/W	Default	Description
7-1	-	00h	**Reserved**
1	R	-	**INT0# from ROM Match Status (INT0RM)** 0: INT0# is deasserted by an 8032 ROM match. 1: INT0# is asserted by an 8032 ROM match.
0	R	-	**INT0# from PWRFAIL# Status (INT0PF)** 0: INT0# is deasserted by a power-fail. 1: INT0# is asserted by a power-fail.

7.2.4.19 Power Fail Register (PFAILR)

It provides two methods to trap the PWRFAIL# event.
This register can't be reset by WDT Reset.

Address Offset: 12h

Bit	R/W	Default	Description
7-3	-	00h	**Reserved**
2	R/W	0b	**PWRFAIL# Trap Enabled and Locked (TRENL)** Firmware sets this bit to enable PWRFAIL# trap. When trap is enabled, INT0 bit in INT0ST will be set if the falling edge transition of PWRFAIL# is detected. This bit can't be cleared by writing 0 to it until reset. 0: no PWRFAIL# Trap 1: PWRFAIL# Trap
1	R	-	**PWRFAIL# Status (PFAILST)** 0: PWRFAIL# is low (asserted) 1: PWRFAIL# is high (deasserted)
0	R/W	0b	**PWRFAIL# Trap Enabled (TREN)** Firmware sets this bit to enable PWRFAIL# trap. When trap is enabled, INT0 bit in INT0ST will be set if the falling edge transition of PWRFAIL# is detected, and TREN will be cleared. This bit is ignored when TRENL bit is set. 0: no PWRFAIL# Trap 1: PWRFAIL# Trap

7.2.5 INTC Interrupt Assignments

Table 7-8. INTC Interrupt Assignments

Interrupt	Source	Default Type(Adjustable)	Description	Reference
INT0	Reserved	-	-	-
INT1	External/WUC	High-Level Trig	WKO[20]	Figure 7-16, p170
INT2	Internal	High-Level Trig	KBC Output Buffer Empty Interrupt	Section 6.5.3, p96
INT3	Internal	High-Level Trig	PMC Output Buffer Empty Interrupt	Section 6.6.3.1, p103
INT4	Internal	Rising-Edge Trig	TMKBC Interrupt	Section 6.7.5.1, p120
INT5	External/WUC	High-Level Trig	WKINTAD (WKINTA or WKINTD)	Figure 7-16, p170
INT6	External/WUC	High-Level Trig	WKO[23]	Figure 7-16, p170
INT7	Internal	High-Level Trig	PWM Interrupt	Section 7.11.4.29, p240
INT8	Internal	High-Level Trig	ADC Interrupt	Section 7.10.3.1, p207
INT9	Internal	High-Level Trig	SMBUS0 Interrupt	Section 7.7.3.1, p187
INT10	Internal	High-Level Trig	SMBUS1 Interrupt	Section 7.7.3.1, p187
INT11	Internal	High-Level Trig	KB Matrix Scan Interrupt	Section 7.4.2, p171
INT12	External/WUC	High-Level Trig	WKO[26]	Figure 7-16, p170
INT13	External/WUC	High-Level Trig	WKINTC	Figure 7-16, p170
INT14	External/WUC	High-Level Trig	WKO[25]	Figure 7-16, p170
INT15	Internal	High-Level Trig	CIR Interrupt	Section 7.17.4.3, p270
INT16	Internal	High-Level Trig	SMBUS2 Interrupt	Section 7.8.2, p199
INT17	External/WUC	High-Level Trig	WKO[24]	Figure 7-16, p170
INT18	Internal	Rising-Edge Trig	PS/2 Interrupt 2	Section 7.8.2, p199
INT19	Internal	Rising-Edge Trig	PS/2 Interrupt 1	Section 7.8.2, p199
INT20	Internal	Rising-Edge Trig	PS/2 Interrupt 0	Section 7.8.2, p199
INT21	External/WUC	High-Level Trig	WKO[22]	Figure 7-16, p170
INT22	Internal	High-Level Trig	SMFI Semaphore Interrupt	Section 6.3.4.5, p72
INT23	Internal	High-Level Trig	SMFI Lock Error Interrupt	Section 6.3.3.10, p63
INT24	Internal	High-Level Trig	KBC Input Buffer Full Interrupt	Section 6.5.3, p96
INT25	Internal	High-Level Trig	PMC Input Buffer Full Interrupt	Section 6.6.3.1, p103
INT26	-	-	-	-
INT27	-	-	-	-
INT28	External	High-Level Trig	GINT from function 1 of GPD5	Table 5-13, p18
INT29	Internal	Rising-Edge Trig	EGPC Interrupt	Section 7.15.3, p261
INT30	Internal	Rising-Edge Trig	External Timer Interrupt	Section 7.13.3, p251
INT31	External/WUC	High-Level Trig	WKO[21]	Figure 7-16, p170

Figure 7-14. INTC Simplified Digram

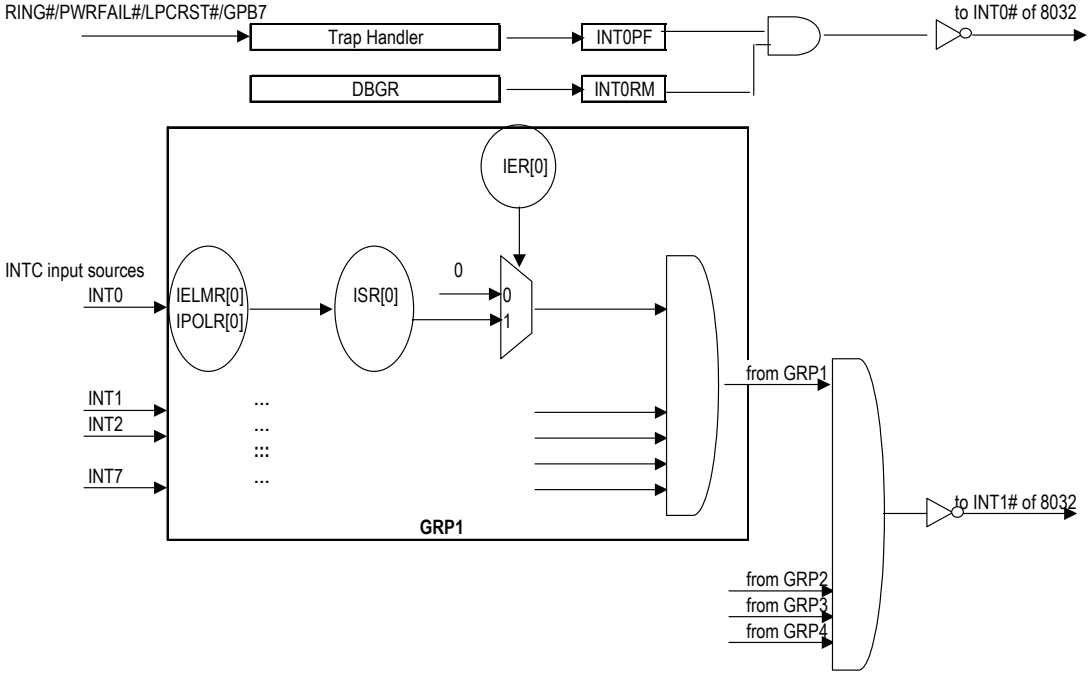

7.2.6 Programming Guide

Figure 7-15. Program Flow Chart for INTC

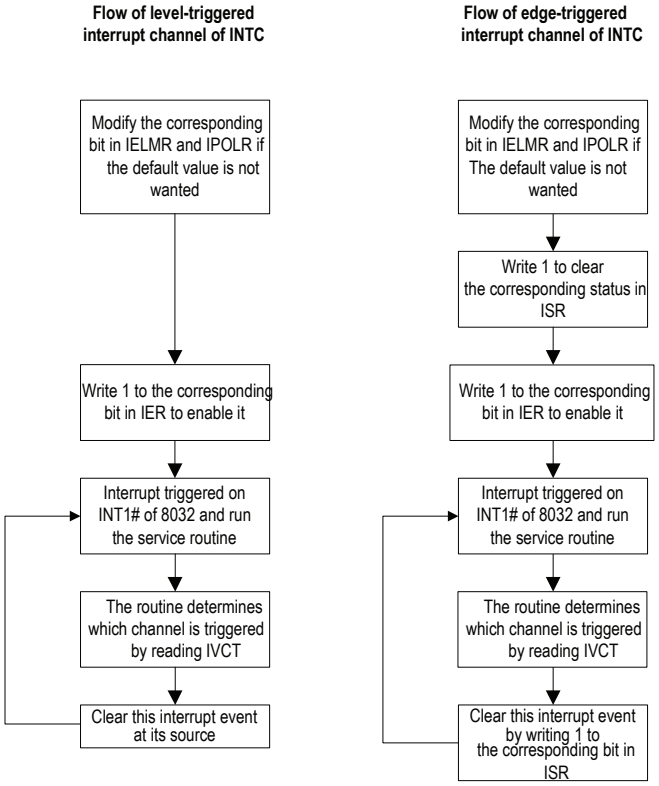

Note: The routine may has its own interrupt priority by reading ISR register.
Note: If this channel source comes from WUC, the corresponding bit of WUESR needs to be cleared, too

7.3 Wake-Up Control (WUC)

7.3.1 Overview

WUC groups internal and external inputs, and asserts wake-up signals to INTC that allows 8032 to exit an Idle/Doze/Sleep mode.

7.3.2 Features

- Supports up to 32 wake-up, internal and external interrupt inputs.
- Supports both the rising-edge and falling-edge triggered mode.
- Input can be connected to INTC directly.

7.3.3 Functional Description

Input sources of WUC are external inputs such as pins about PS/2, GPIO and KB Matrix Scan, or inputs from internal module such as SWUC, LPC and SMBUS that handle external inputs.

Each channel can be selected to be rising or falling edge triggered mode. If one channel is disabled, the input bypasses WUC pending logic and is connected directly to INTC.

7.3.4 EC Interface Registers

The EC interface registers are listed below. The base address for WUC is 1B00h.

Table 7-9. EC View Register Map, WUC

7	0	Offset
Wake-Up Edge Mode Register (WUEMR1)		00h
Wake-Up Edge Mode Register (WUEMR2)		01h
Wake-Up Edge Mode Register (WUEMR3)		02h
Wake-Up Edge Mode Register (WUEMR4)		03h
Wake-Up Edge Sense Register (WUESR1)		04h
Wake-Up Edge Sense Register (WUESR2)		05h
Wake-Up Edge Sense Register (WUESR3)		06h
Wake-Up Edge Sense Register (WUESR4)		07h
Wake-Up Enable Register (WUENR1)		08h
Wake-Up Enable Register (WUENR2)		09h
Wake-Up Enable Register (WUENR3)		0Ah
Wake-Up Enable Register (WUENR4)		0Bh

7.3.4.1 Wake-Up Edge Mode Register (WUEMR1)

This register configures the trigger mode of input signals WU10 to WU17.

Address Offset: 00h

Bit	R/W	Default	Description
7-0	R/W	0h	**Wake-Up Edge Mode (WUEM17-10)** 0: Rising-edge triggered is selected. 1: Falling-edge triggered is selected.

7.3.4.2 Wake-Up Edge Mode Register (WUEMR2)

This register configures the trigger mode of input signals WU20 to WU27.

Address Offset: 01h

Bit	R/W	Default	Description
7-0	R/W	0h	**Wake-Up Edge Mode (WUEM27-20)** 0: Rising-edge triggered is selected. 1: Falling-edge triggered is selected.

7.3.4.3 Wake-Up Edge Mode Register (WUEMR3)

This register configures the trigger mode of input signals WU30 to WU37.

Address Offset: 02h

Bit	R/W	Default	Description
7-0	R/W	0h	**Wake-Up Edge Mode (WUEM37-30)** 0: Rising-edge triggered is selected. 1: Falling-edge triggered is selected.

7.3.4.4 Wake-Up Edge Mode Register (WUEMR4)

This register configures the trigger mode of input signals WU40 to WU47.

Address Offset: 03h

Bit	R/W	Default	Description
7-0	R/W	0h	**Wake-Up Edge Mode (WUEM47-40)** 0: Rising-edge triggered is selected. 1: Falling-edge triggered is selected.

7.3.4.5 Wake-Up Edge Sense Register (WUESR1)

This register indicates the occurrence of a selected trigger condition and is associated with input signals WU10 to WU17.

Note: Each bit cannot be set by software. Writing a 1 can clear these bits and writing a 0 has no effect.

Address Offset: 04h

Bit	R/W	Default	Description
7-0	R/WC	-	**Wake-Up Sense (WUES17-10)** For each bit: Read 1: It indicates a trigger condition occurs on the corresponding input. Read 0: otherwise For each bit: Write 1: Clear this bit Write 0: No action

7.3.4.6 Wake-Up Edge Sense Register (WUESR2)

This register indicates the occurrence of a selected trigger condition and is associated with input signals WU20 to WU27.

Note: Each bit cannot be set by software. Writing a 1 can clear these bits and writing a 0 has no effect.

Address Offset: 05h

Bit	R/W	Default	Description
7-0	R/WC	-	**Wake-Up Sense (WUES27-20)** For each bit: Read 1: It indicates a trigger condition occurs on the corresponding input. Read 0: otherwise For each bit: Write 1: Clear this bit Write 0: No action

7.3.4.7 Wake-Up Edge Sense Register (WUESR3)

This register indicates the occurrence of a selected trigger condition and is associated with input signals WU30 to WU37.

Note: Each bit cannot be set by software. Writing a 1 can clear these bits and writing a 0 has no effect.

Address Offset: 06h

Bit	R/W	Default	Description
7-0	R/WC	-	**Wake-Up Sense (WUES37-30)** For each bit: Read 1: It indicates a trigger condition occurs on the corresponding input. Read 0: otherwise For each bit: Write 1: Clear this bit Write 0: No action

7.3.4.8 Wake-Up Edge Sense Register (WUESR4)

This register indicates the occurrence of a selected trigger condition and is associated with input signals WU40 to WU47.
Note: Each bit cannot be set by software. Writing a 1 can clear these bits and writing a 0 has no effect.

Address Offset: 07h

Bit	R/W	Default	Description
7-0	R/WC	-	**Wake-Up Sense (WUES47-40)** For each bit: Read 1: It indicates a trigger condition occurs on the corresponding input. Read 0: otherwise For each bit: Write 1: Clear this bit Write 0: No action

7.3.4.9 Wake-Up Enable Register (WUENR1)

This register enables a wake-up function of the corresponding input signal WU10 to WU17.

Address Offset: 08h

Bit	R/W	Default	Description
7-0	R/W	0h	**Wake-Up Enable (WUEN17-10)** 1: A trigger condition on the corresponding input generates a wake-up signal to the power management control of EC. 0: A trigger condition on the corresponding input doesn't assert the wake-up signal; it is canceled but not pending.

7.3.4.10 Wake-Up Enable Register (WUENR2)

This register enables a wake-up function of the corresponding input signal WU20 to WU27.

Address Offset: 09h

Bit	R/W	Default	Description
7-0	R/W	0h	**Wake-Up Enable (WUEN27-20)** 1: A trigger condition on the corresponding input generates a wake-up signal to the power management control of EC, and the WUO27-20 from WUI27-20 is processed by WUEMR2 and WUESR2. 0: A trigger condition on the corresponding input doesn't assert the wake-up signal and the WUO27-20 is connected to the INTC directly.

7.3.4.11 Wake-Up Enable Register (WUENR3)

This register enables a wake-up function of the corresponding input signal WU30 to WU37.

Address Offset: 0Ah

Bit	R/W	Default	Description
7-0	R/W	0h	**Wake-Up Enable (WUEN37-30)** 1: A trigger condition on the corresponding input generates a wake-up signal to the power management control of EC. 0: A trigger condition on the corresponding input doesn't assert the wake-up signal; it is canceled, not pending.

7.3.4.12 Wake-Up Enable Register (WUENR4)

This register enables a wake-up function of the corresponding input signal WU40 to WU47.

Address Offset: 0Bh

Bit	R/W	Default	Description
7-0	R/W	0h	**Wake-Up Enable (WUEN47-40)** 1: A trigger condition on the corresponding input generates a wake-up signal to the power management control of EC. 0: A trigger condition on the corresponding input doesn't assert the wake-up signal; it is canceled but not pending.

7.3.5 WUC Input Assignments

Table 7-10. WUC Input Assignments

WUC Input	Source	Description	Output to INTC	Default Type (Adjustable)
WU10	PS2CLK0	External Source from Pin	WKINTA, to INT5	Rising Edge Trig
WU11	PS2DAT0	External Source from Pin		Rising Edge Trig
WU12	PS2CLK1	External Source from Pin		Rising Edge Trig
WU13	PS2DAT1	External Source from Pin		Rising Edge Trig
WU14	PS2CLK2	External Source from Pin		Rising Edge Trig
WU15	PS2DAT2	External Source from Pin		Rising Edge Trig
WU16	Reserved			
WU17	Reserved			
WU20	WUI0	External Source from Pin	WKO[20], to INT1	Rising Edge Trig
WU21	WUI1	External Source from Pin	WKO[21], to INT31	Rising Edge Trig
WU22	WUI2	External Source from Pin	WKO[22], to INT21	Rising Edge Trig
WU23	WUI3	External Source from Pin	WKO[23], to INT6	Rising Edge Trig
WU24	WUI4	External Source from Pin	WKO[24], to INT17	Rising Edge Trig
WU25	PWRSW	External Source from Pin	WKO[25], to INT14	Rising Edge Trig
WU26	SWUC Wake Up	From SWUC Module	WKO[26], to INT12	Rising Edge Trig
WU27	Reserved			
WU30	KSI[0]	External Source from Pin	WKINTC, to INT13	Rising Edge Trig
WU31	KSI[1]	External Source from Pin		Rising Edge Trig
WU32	KSI[2]	External Source from Pin		Rising Edge Trig
WU33	KSI[3]	External Source from Pin		Rising Edge Trig
WU34	KSI[4]	External Source from Pin		Rising Edge Trig
WU35	KSI[5]	External Source from Pin		Rising Edge Trig
WU36	KSI[6]	External Source from Pin		Rising Edge Trig
WU37	KSI[7]	External Source from Pin		Rising Edge Trig
WU40	WUI5	External Source from Pin	WKINTD, to INT5	Rising Edge Trig
WU41	CRX	External Source from Pin		Rising Edge Trig
WU42	LPC Access	LPC Cycle with Address Recognized See also Section 6.1.6, p37		Rising Edge Trig
WU43	SMDAT0	External Source from Pin		Rising Edge Trig
WU44	SMDAT1	External Source from Pin		Rising Edge Trig
WU45	WUI6	External Source from Pin		Rising Edge Trig
WU46	WUI7	External Source from Pin		Rising Edge Trig
WU47	SMDAT2	External Source from Pin		Rising Edge Trig

Figure 7-16. WUC Simplified Digram

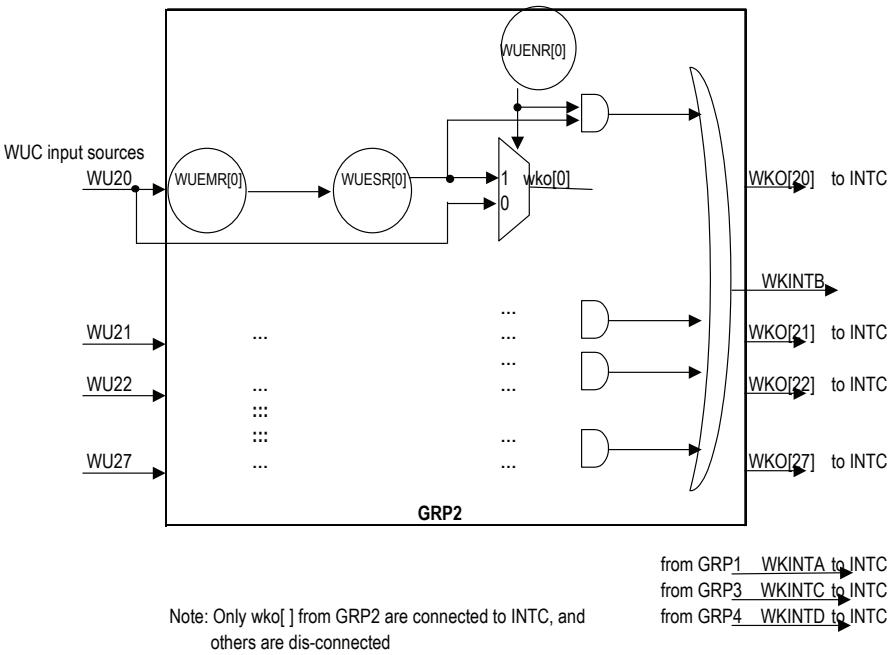

7.3.6 Programming Guide

If the WUC source is from GPIO port, the firmware should not enable the corresponding channel when this GPIO is not in alternate function.

Figure 7-17. Program Flow Chart for WUC

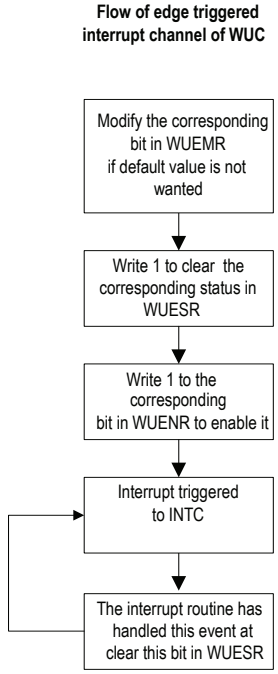

7.4 Keyboard Matrix Scan Controller

7.4.1 Overview

The module provides control for keyboard matrix scan.

7.4.2 Features

- Supports 18 x scan output
- Supports 8 x scan input
- Supports Schmitt trigger input pin
- Supports programmable pull-up on all output/input pins
- Supports one interrupt (connected to INT11 of INTC) for any KSI inputs to go low to wake up the system

7.4.3 EC Interface Registers

The keyboard matrix scan registers are listed below. The base address is 1D00h.

Table 7-11. EC View Register Map, KB Scan

7	0	Offset
Keyboard Scan Out [7:0] (KSOL)		00h
Keyboard Scan Out [15:8] (KSOH1)		01h
Keyboard Scan Out Control (KSOCTRL)		02h
Keyboard Scan Out [17:16] (KSOH2)		03h
Keyboard Scan In [7:0] (KSI)		04h
Keyboard Scan In Control (KSICTRL)		05h

7.4.3.1 Keyboard Scan Out Low Byte Data Register (KSOL)

Address Offset: 00h

Bit	R/W	Default	Description
7-0	R/W	0h	**Keyboard Scan Out Low Data [7:0] (KSOL)** This is the 8-bit keyboard scan output register which controls the KSO[7:0] pins.

7.4.3.2 Keyboard Scan Out High Byte Data 1 Register (KSOH1)

Address Offset: 01h

Bit	R/W	Default	Description
7-0	R/W	0h	**Keyboard Scan Out High Data 1 [7:0] (KSOH1)** This is the 8-bit keyboard scan output register which controls the KSO[15:8] pins.

7.4.3.3 Keyboard Scan Out Control Register (KSOCTRL)

Address Offset: 02h

Bit	R/W	Default	Description
7-6	-	-	**Reserved**
5-3	-	-	**Reserved**
2	R/W	0h	**KSO Pull Up (KSOPU)** Setting 1 enables the internal pull up of the KSO[15:0] pins. To pull up KSO[17:16], set the GPCR registers of their corresponding GPIO ports.
1	-	-	**Reserved**
0	R/W	0h	**KSO Open Drain (KSOOD)** Setting 1 enables the open-drain mode of the KSO[17:0] pins. Setting 0 selects the push-pull mode.

7.4.3.4 Keyboard Scan Out High Byte Data 2 Register (KSOH2)

Address Offset: 03h

Bit	R/W	Default	Description
7-2	-	-	**Reserved**
1-0	R/W	0h	**Keyboard Scan Out High Data 2 [1:0] (KSOH2)** This is the 2-bit keyboard scan output register which controls the KSO[17:16] pins.

7.4.3.5 Keyboard Scan In Data Register (KSIR)

Address Offset: 04h

Bit	R/W	Default	Description
7-0	R	0h	**Keyboard Scan In High Data [7:0] (KSI)** This is the 8-bit keyboard scan input register which shows the value of the KSI[7:0] pins.

7.4.3.6 Keyboard Scan In Control Register (KSICTRLR)

Address Offset: 05h

Bit	R/W	Default	Description
7-5	-	0h	**Reserved**
4	R/W	0h	**Override PP from KBS (OVRPPK)** This bit overrides PP function which is enabled by hardware strap in KBS interface and disables it.
3	R/W	0h	**Override PP from PPEN (OVRPPEN)** This bit overrides PP function which is enabled by hardware strap PPEN and disables it.
2	R/W	0h	**KSI Pull Up (KSIPU)** Setting 1 enables the internal pull up of the KSI[7:0] pins.
1	-	-	**Reserved**
0	-	-	**Reserved**

7.5 General Purpose I/O Port (GPIO)

7.5.1 Overview

The General Purpose I/O Port is composed of independent I/O pins controlled by registers.

There are also other available general purpose I/O such as External GPIO Control (EGPC), hardware strap ID7-0, GPI on LPC/FWH flash and FWH ID on FWH flash.

7.5.2 Features

- I/O pins individually configured as input, output or alternate function
- Supports 71-port GPIO with LPC/FWH flash
- Supports 73-port GPIO with serial flash
- Configurable internal pull-up resistors
- Configurable internal pull-down resistors
- Supports Schmitt-Trigger input on all ports

7.5.3 EC Interface Registers

The EC interface registers are listed below. The base address for GPIO is 1600h.

Table 7-12. EC View Register Map, GPIO

7	0	Offset
General Control Register (GCR)		00h
Port Data Register (GPDRA)		01h
Port Data Register (GPDRB)		02h
…		…
Port Data Register (GPDRJ)		0Ah
Port Control n Registers (GPCRA0)		10h
Port Control n Registers (GPCRA1)		11h
…		…
Port Control n Registers (GPCRJ5)		5Dh
Port Data Mirror Register (GPDMRA)		61h
Port Data Mirror Register (GPDMRB)		62h
…		…
Port Data Mirror Register (GPDMRJ)		6Ah
Output Type Register (GPOTH)		78h

7.5.3.1 General Control Register (GCR)

This register individually controls the bus state of each port. The input gating and output floating control signals can be used to reduce power consumption in various system conditions.

Address Offset: 00h

Bit	R/W	Default	Description
7	R/W	0h	**GPB5 Follow LPCRST# Enable (GFLE)** 1: GPDRB bit 5 will be set immediately if there is a high-to-low transition on WUI4. 0: Otherwise Note that GA20 is function 1 of GPB5, LPCRST# is function 1 of GPD2 and WUI4 is function 2 of GPD2.
6	R/W	0b	**WUI7 Enabled (WUI7EN)** When set, WUI7 is on input from GPE7. It is valid only when GPMD is input or output mode.
5	R/W	0b	**WUI6 Enabled (WUI6EN)** When set, WUI6 is on input from GPE6. It is valid only when GPMD is input or output mode.
4-3	-	00b	**Reserved**
2-1	R/W	10b	**LPC Reset Enabled (LPCRSTEN)** 00: Reserved 01: LPC Reset is enabled on GPB7. 10: LPC Reset is enabled on GPD2. 11: LPC Reset is disabled.
0	-	-	**Reserved**

7.5.3.2 Port Data Registers A-J (GPDRA-GPDRJ)

The Port Data register (GPDR) is an 8-bit register. The pin function is controlled by Port Control Register (GPCRn). When the pin function is set to be a general output pin, the value of the GPDRx bit is directly output to its corresponding pin. When the pin function is set to be a general input pin, the pin level status can be detected by reading the corresponding register bit. Each register contains one group which has eight ports at most.

Address Offset: 01h-0Ah

Bit	R/W	Default	Description
7-0	R/W	GPDRB: 20h Otherwise: 00h	**Port Data Register (GPDRn[7:0])** When the pin function is set to be a general output pin, the value of this bit is directly output to its corresponding pin. In the output mode, reading returns the last written data to GPDRn. In other modes, reading this register returns the pin level status. For group I/J, the return data may have no meaningful in the function 1 mode.

7.5.3.3 Port Data Mirror Registers A-J (GPDMRA-GPDMRJ)

Address Offset: 61h-6Ah

Bit	R/W	Default	Description
7-0	R	-	**Port Data Mirror Register (GPDMRn[7:0])** Reading this register returns the pin level status. For group I/J, the return data may have no meaningful in the function 1 mode.

7.5.3.4 Port Control n Registers (GPCRn, n = A0-I7)

These registers are used to control the functions of each I/O port pin. Each register is responsible for the settings of one pin in the port.
If Operation Mode is "Alternate Function", Function 1 and/or Function 2 will be enabled. Refer to Table 7-13. GPIO Alternate Function on page 177 for details. Note that GPEO-GPE4 don't have output mode and the corresponding GPMD cannot be assigned as 01.
Note GPCRI5 can't be reset by Warm Reset.

Address Offset: 10h-17h for GPCRA0-GPCRA7, respectively (Group A)
Address Offset: 18h-1Fh for GPCRB0-GPCRB7, respectively (Group B)
Address Offset: 20h-27h for GPCRC0-GPCRC7, respectively (Group C)
Address Offset: 28h-2Fh for GPCRD0-GPCRD7, respectively (Group D)
Address Offset: 30h-37h for GPCRE0-GPCRE7, respectively (Group E)
Address Offset: 38h-3Fh for GPCRF0-GPCRF7, respectively (Group F)
Address Offset: 40h-47h for GPCRG0-GPCRG7, respectively (Group G)
Address Offset: 48h-4Eh for GPCRH0-GPCRH6, respectively (Group H)
Address Offset: 50h-57h for GPCRI0- GPCRI7, respectively (Group I)
Address Offset: 58h-5Dh for GPCRJ0- GPCRJ5, respectively (Group J)

<table>
<tr><th>Bit</th><th>R/W</th><th>Default</th><th>Description</th></tr>
<tr><td>7-6</td><td>R/W</td><td>GPCRB5: 01b
GPCRB6: 00b
Otherwise: 10b</td><td>Port Pin Mode (GPMD[1:0])
These bits are used to select the GPIO operation Mode.
Note that group I doesn't have output mode and the corresponding GPMD cannot be assigned as 01.
<table>
<tr><th>GPMD[1:0]</th><th>Pin Status</th><th>READ GPDRn</th><th>WRITE GPDRn</th></tr>
<tr><td>00b</td><td>Alternate Function</td><td>Pin Status</td><td>GPDR is writable but it has no effects on the pin status.</td></tr>
<tr><td>01b</td><td>Output</td><td>Pin Status</td><td>The value written to GPDR is output to pin.</td></tr>
<tr><td>10b</td><td>Input</td><td>Pin Status</td><td>GPDR is writable but it has no effects on the pin status.</td></tr>
<tr><td>11b</td><td>Reserved</td><td>-</td><td>-</td></tr>
</table></td></tr>
<tr><td>5-3</td><td>R/W</td><td>000b</td><td>Port Pin Output Driving Capability (GPOD)
The adjustable output driving capability is only available on port GPA0-A3, B0, B1, C7, E0, E7 and H0-H6, totally 16 ports and this register field is reversed for all other GPIO ports.
The following driving currents capability are denoted by sourcing/sinking.
000b: 2/3 mA
001b: 4/6 mA
010b: 6/9 mA
011b: 8/12 mA
110b: 10/15 mA
111b: 12/18 mA
otherwise: reserved</td></tr>
<tr><td>2</td><td>R/W</td><td>Refer to Table 7-13 on page 177</td><td>Port Pin Pull Up (GPPU)
This bit is used to pull the port. It is always valid regardless of GPMD, input or output. Enable this bit will increase power consumption.
Note that if one port is operated in output mode, it should not enable this bit unless its output type is open-drain. For example, clear this bit when DAC0/GPJ0 is switched to alternative function.</td></tr>
</table>

1	R/W	Refer to Table 7-13 on page 177	**Port Pin Pull Down (GPPD)** This bit is used to pull the port. This bit is always valid regardless of GPMD, input or output. Never enable pull up/down of a port at the same time or it forms a DC path and has unnecessary leakage current.
0	R/W	0	**Reserved**

7.5.3.5 Output Type Registers H (GPOTH)

The Output Type register (GPOT) is an 8-bit register. These registers control the output type of GPIO. Each register contains one group which has eight ports at most. Note that these bits are valid only when corresponding GPMD equals to 01 (Output mode).

Address Offset: 78h

Bit	R/W	Default	Description
7-0	R/W	00h	**Output Type Register (GPOTn[7:0])** The adjustable output types are only available on port GPH0-H6, totally 7 ports. For each bit: 0: Push-pull output 1: Open-drain output

7.5.4 Alternate Function Selection

The following lists function 1 and function 2 of each GPIO port. Notice that the GA20 function can be implemented by GPO or function 1 which is implemented at KBC module. Function 1 of GPB6 is KBRST# from KBC module through SWUC mode. LPCRST# is recommended to input from GPD2 port.

Table 7-13. GPIO Alternate Function

Group		Addr	Pin Loc.	Function 1	Condition	Function 2	Condition	Output Driving (mA)	Schmitt Trigger	Pull Cap.	Default Pull	Default Mode
GPIOA	0	1610h	24	PWM0	GPCRA0[7:6]=00			2/3 ~ 12/18	Y	Up/Dn	Up	GPI
	1	1611h	25	PWM1	GPCRA1[7:6]=00			2/3 ~ 12/18	Y	Up/Dn	Up	GPI
	2	1612h	28	PWM2	GPCRA2[7:6]=00			2/3 ~ 12/18	Y	Up/Dn	Up	GPI
	3	1613h	29	PWM3	GPCRA3[7:6]=00			2/3 ~ 12/18	Y	Up/Dn	Up	GPI
	4	1614h	30	PWM4	GPCRA4[7:6]=00			8	Y	Up/Dn	Up	GPI
	5	1615h	31	PWM5	GPCRA5[7:6]=00			8	Y	Up/Dn	Up	GPI
	6	1616h	32	PWM6	GPCRA6[7:6]=00			8	Y	Up/Dn	Up	GPI
	7	1617h	34	PWM7	GPCRA7[7:6]=00			8	Y	Up/Dn	Up	GPI
GPIOB	0	1618h	108	RXD	GPCRB0[7:6]=00			2/3 ~ 12/18	Y	Up/Dn	Up	GPI
	1	1619h	109	TXD	GPCRB1[7:6]=00			2/3 ~ 12/18	Y	Up/Dn	Up	GPI
	2	161Ah	123	CTX	GPCRB2[7:6]=00			8	Y	Up/Dn	Dn	GPI
	3	161Bh	110	SMCLK0	GPCRB3[7:6]=00			4	Y	Up/Dn		GPI
	4	161Ch	111	SMDAT0	GPCRB4[7:6]=00			4	Y	Up/Dn		GPI
	5	161Dh	126	GA20	GPCRB5[7:6]=00			2	Y	Up/Dn		GPO
	6	161Eh	4	KBRST#	GPCRB6[7:6]=00			2	Y	Up/Dn	Up	Func1
	7	161Fh	112	RING#	GPCRB7[7:6]=00	PWRFAIL#/ LPCRST#	GPCRB7[7:6]=00 /LPCRSTEN=01	2	Y	Up/Dn	Dn	GPI
Group		**Addr**	**Pin Loc.**	**Function 1**	**Condition**	**Function 2**	**Condition**	**Output Driving (mA)**	**Schmitt Trigger**	**Pull Cap.**	**Default Pull**	**Default Mode**
GPIOC	0	1620h	119	CRX	GPCRC0[7:6]=00			2	Y	Up/Dn	Dn	GPI
	1	1621h	115	SMCLK1	GPCRC1[7:6]=00			4	Y	Up/Dn		GPI
	2	1622h	116	SMDAT1	GPCRC2[7:6]=00			4	Y	Up/Dn		GPI

Group		Addr	Pin Loc.	Function 1	Condition	Function 2	Condition	Output Driving (mA)	Schmitt Trigger	Pull Cap.	Default Pull	Default Mode
	3	1623h	56	KSO16	GPCRC3[7:6]=00			8	Y	Up/Dn	Dn	GPI
	4	1624h	120	TMRI0	GPCRC4[7:6]=00	WUI2	GPCRC4[7:6]=00	2	Y	Up/Dn	Dn	GPI
	5	1625h	57	KSO17	GPCRC5[7:6]=00			8	Y	Up/Dn	Dn	GPI
	6	1626h	124	TMRI1	GPCRC6[7:6]=00	WUI3	GPCRC6[7:6]=00	2	Y	Up/Dn	Dn	GPI
	7	1627h	16	PWUREQ#	GPCRC7[7:6]=00			2/3 ~ 12/18	Y	Up/Dn	Up	GPI
GPIOD	0	1628h	18	RI1#	GPCRD0[7:6]=00	WUI0	GPCRD0[7:6]=00	4	Y	Up/Dn	Up	GPI
	1	1629h	21	RI2#	GPCRD1[7:6]=00	WUI1	GPCRD1[7:6]=00	4	Y	Up/Dn	Up	GPI
	2	162Ah	22	LPCRST#	LPCRSTEN=10	WUI4	GPCRD2[7:6]=00	8	Y	Up/Dn	Up	Func1
	3	162Bh	23	ECSCI#	GPCRD3[7:6]=00			8	Y	Up/Dn	Up	GPI
	4	162Ch	15	SMI#	GPCRD4[7:6]=00			8	Y	Up/Dn	Up	GPI
	5	162Dh	33	GINT	GPCRD5[7:6]=00			8	Y	Up/Dn	Up	GPI
	6	162Eh	47	TACH0	GPCRD6[7:6]=00			2	Y	Up/Dn	Dn	GPI
	7	162Fh	48	TACH1	GPCRD7[7:6]=00			2	Y	Up/Dn	Dn	GPI
GPIOE	0	1630h	19	LPC80HL	GPCRE0[7:6]=00			2/3 ~ 12/18	Y	Up/Dn	Dn	GPI
	1	1631h	82	EGAD	GPCRE1[7:6]=00			8	Y	Up/Dn	Dn	GPI
	2	1632h	83	EGCS#	GPCRE2[7:6]=00			8	Y	Up/Dn	Dn	GPI
	3	1633h	84	EGCLK	GPCRE3[7:6]=00			8	Y	Up/Dn	Dn	GPI
	4	1634h	125	PWRSW	GPCRE4[7:6]=00			2	Y	Up/Dn	Up	GPI
	5	1635h	35			WUI5	GPCRE5[7:6]=00	2	Y	Up/Dn	Dn	GPI
	6	1636h	17	LPCPD#	GPCRE6[7:6]=00	WUI6	WUI6EN bit GCR register	2	Y	Up/Dn	Dn	GPI
	7	1637h	20	LPC80LL	GPCRE7[7:6]=00			2/3 ~ 12/18	Y	Up/Dn	Up	GPI
Group		**Addr**	**Pin Loc.**	**Function 1**	**Condition**	**Function 2**	**Condition**	**Output Driving (mA)**	**Schmitt Trigger**	**Pull Cap.**	**Default Pull**	**Default Mode**
GPIOF	0	1638h	85	PS2CLK0	GPCRF0[7:6]=00			8	Y	Up/Dn	Up	GPI
	1	1639h	86	PS2DAT0	GPCRF1[7:6]=00			8	Y	Up/Dn	Up	GPI

Group		Addr	Pin Loc.	Function 1	Condition	Function 2	Condition	Output Driving (mA)	Schmitt Trigger	Pull Cap.	Default Pull	Default Mode
	2	163Ah	87	PS2CLK1	GPCRF2[7:6]=00			8	Y	Up/Dn	Up	GPI
	3	163Bh	88	PS2DAT1	GPCRF3[7:6]=00			8	Y	Up/Dn	Up	GPI
	4	163Ch	89	PS2CLK2	GPCRF4[7:6]=00			8	Y	Up/Dn	Up	GPI
	5	163Dh	90	PS2DAT2	GPCRF5[7:6]=00			8	Y	Up/Dn	Up	GPI
	6	163Eh	117	SMCLK2	GPCRF6[7:6]=00			4	Y	Up/Dn	Up	GPI
	7	163Fh	118	SMDAT2	GPCRF7[7:6]=00			4	Y	Up/Dn	Up	GPI
GPIOG	0	1640h	106	FLRST#	LPC/FWH (It must be set as Func1 after reset)	WUI7	WUI7EN bit GCR register	4	Y	Up/Dn	Dn (Default output high)	GPO/TM
	1	1641h	107					4	Y	Up/Dn	Dn	GPO/ID7
	2	1642h	100	FLRAME#	LPC/FWH			4	Y	Up/Dn		LPC/FWH: Func1 otherwise: GPI
	6	1646h	104	FLAD3	LPC/FWH			4	Y	Up/Dn		LPC/FWH: Func1 otherwise: GPI
GPIOH	0	1648h	93					2/3 ~ 12/18	Y	Up/Dn	Dn	GPI/ID0
	1	1649h	94					2/3 ~ 12/18	Y	Up/Dn	Dn	GPI/ID1
	2	164Ah	95					2/3 ~ 12/18	Y	Up/Dn	Dn	GPI/ID2
	3	164Bh	96					2/3 ~ 12/18	Y	Up/Dn	Dn	GPI/ID3
	4	164Ch	97					2/3 ~ 12/18	Y	Up/Dn	Dn	GPI/ID4
	5	164Dh	98					2/3 ~ 12/18	Y	Up/Dn	Dn	GPI/ID5
	6	164Eh	99					2/3 ~ 12/18	Y	Up/Dn	Dn	GPI/ID6
Group		**Addr**	**Pin Loc.**	**Function 1**	**Condition**	**Function 2**	**Condition**	**Output Driving (mA)**	**Schmitt Trigger**	**Pull Cap.**	**Default Pull**	**Default Mode**

Group		Addr	Pin Loc.	Function 1	Condition	Function 2	Condition	Output Driving (mA)	Schmitt Trigger	Pull Cap.	Default Pull	Default Mode
GPIOI	0	1650h	66	ADC0				(input only)				GPI
	1	1651h	67	ADC1				(input only)				GPI
	2	1652h	68	ADC2				(input only)				GPI
	3	1653h	69	ADC3				(input only)				GPI
	4	1654h	70	ADC4				(input only)				GPI
	5	1655h	71	ADC5				(input only)				GPI
	6	1656h	72	ADC6				(input only)				GPI
	7	1657h	73	ADC7				(input only)				GPI
GPIOJ	0	1658h	76	DAC0				4	Y	Up/Dn		GPI
	1	1659h	77	DAC1				4	Y	Up/Dn		GPI
	2	165Ah	78	DAC2				4	Y	Up/Dn		GPI
	3	165Bh	79	DAC3				4	Y	Up/Dn		GPI
	4	165Ch	80	DAC4				4	Y	Up/Dn		GPI
	5	165Dh	81	DAC5				4	Y	Up/Dn		GPI

Note: Since all GPIO belong to VSTBY power plane, and there are some special considerations below:
(1) If it is output to external VCC derived power plane circuit, this signal should be isolated by a diode such as KBRST# and GA20.
(2) If it is input from external VCC derived power plane circuit, this external circuit must consider not floating the GPIO input.

Figure 7-18. GPIO Simplified Diagram

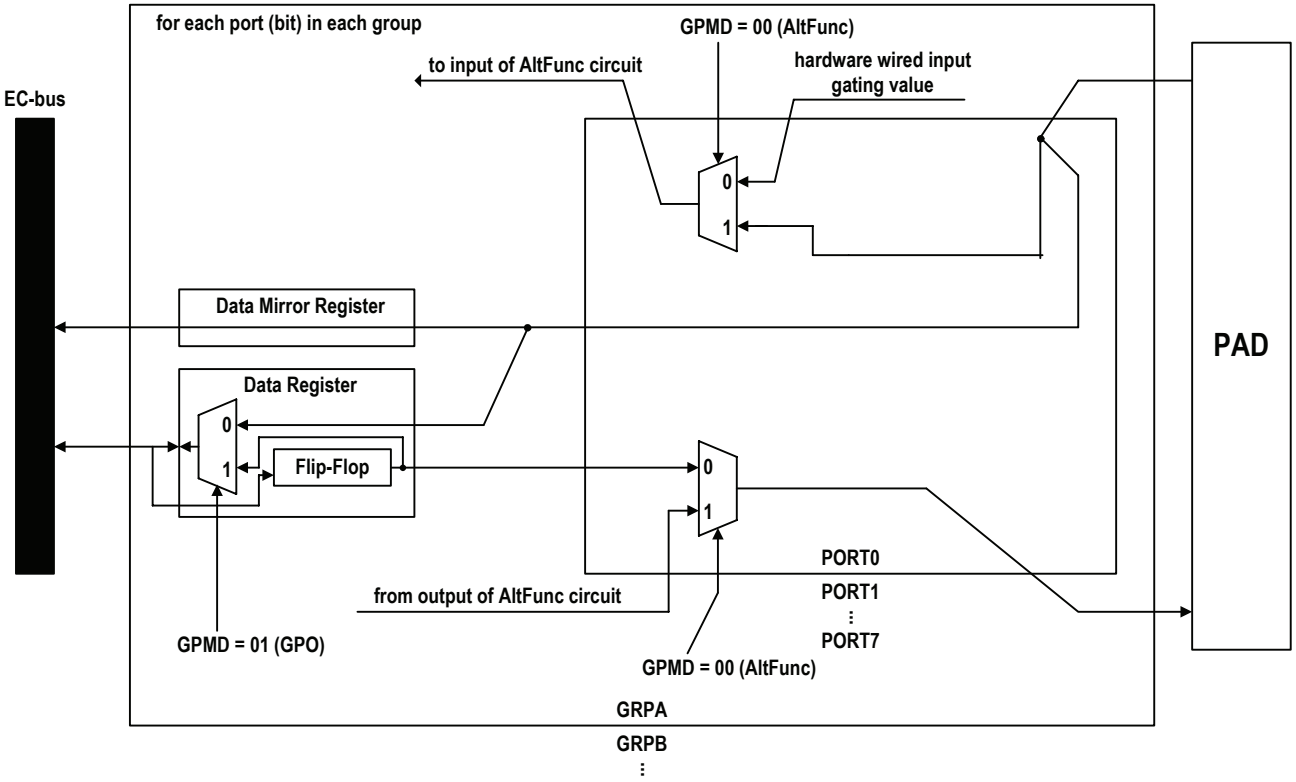

7.5.5 Programming Guide

The firmware should modify LPCRSTEN when it boots up if necessary.

7.6 EC Clock and Power Management Controller (ECPM)

7.6.1 Overview

The EC Clock and Power Management module provide the EC clock control and power management.

7.6.2 Features

- Supports programmable EC clock frequency
- Supported by module power-down mode control
- Supports PLL power-down when 8032 enters a Sleep mode

7.6.3 EC Interface Registers

The clock generation and power management registers are listed below. The base address is 1E00h.

Table 7-14. EC View Register Map, ECPM

7	0	Offset
Reserved		00h
Clock Gating Control 1 (CGCTRL1R)		01h
Clock Gating Control 2 (CGCTRL2R)		02h
Clock Gating Control 3 (CGCTRL3R)		05h
PLL Control (PLLCTRL)		03h
Auto Clock Gating (AUTOCG)		04h
PLL Frequency (PLLFREQR)		06h

7.6.3.1 Clock Gating Control 1 Register (CGCTRL1R)

This register is reset by VSTBY Power-Up reset only.

Address Offset: 01h

Bit	R/W	Default	Description
7	R/W	0b	**GPIO Clock Gating (GPIOCG)** 0: Operation 1: Clock to this module is gated
6	R/W	0b	**ETWD Clock Gating (ETWDCG)** 0: Operation 1: Clock to this module is gated
5	R/W	0b	**SMB Clock Gating (SMBCG)** 0: Operation 1: Clock to this module is gated
4	R/W	0b	**Keyboard Scan Clock Gating (KBSCG)** 0: Operation 1: Clock to this module is gated
3	R/W	0b	**PS/2 Clock Gating (PS2CG)** 0: Operation 1: Clock to this module is gated
2	R/W	0b	**PWM Clock Gating (PWMCG)** 0: Operation 1: Clock to this module is gated
1	R/W	0b	**DAC Clock Gating (DACCG)** 0: Operation 1: Clock to this module is gated
0	R/W	0b	**ADC Clock Gating (ADCCG)** 0: Operation 1: Clock to this module is gated

7.6.3.2 Clock Gating Control 2 Register (CGCTRL2R)

This register is reset by VSTBY Power-Up reset only.

Address Offset: 02h

Bit	R/W	Default	Description
7	R/W	0b	**TMKBC Clock Gating (TMKCG)** 0: Operation 1: Clock to this module is gated
6	R/W	0b	**EGPC Clock Gating (EXGCG)** 0: Operation 1: Clock to this module is gated
5	R/W	0b	**CIR Clock Gating (CIRCG)** 0: Operation 1: Clock to this module is gated
4	R/W	0b	**SWUC Clock Gating (SWUCCG)** 0: Operation 1: Clock to this module is gated
3	R/W	0b	**PMC Clock Gating (PMCCG)** 0: Operation 1: Clock to this module is gated
2	R/W	0b	**KBC Clock Gating (KBCCG)** 0: Operation 1: Clock to this module is gated
1	R/W	0b	**EC2I Clock Gating (EC2ICG)** 0: Operation 1: Clock to this module is gated
0	R/W	0b	**SMFI Clock Gating (SMFICG)** 0: Operation 1: Clock to this module is gated

7.6.3.3 Clock Gating Control 3 Register (CGCTRL3R)

This register is reset by VSTBY Power-Up reset only.

Address Offset: 05h

Bit	R/W	Default	Description
7	W	0b	**R8030TT UART Clock Gating(UARTCG)** 0: Operation 1: Clock to this function is gated
6	W	1b	**Reserved** Always write 1 to this bit.
5-1	-	-	**Reserved**
0	R/W	1b	**DBGR Clock Gating (DBGRCG)** 0: Operation 1: Clock to this module is gated.

7.6.3.4 PLL Control (PLLCTRL)

This register is reset by VSTBY Power-Up reset only.

Address Offset: 03h

Bit	R/W	Default	Description
7-1	-	-	**Reserved**
0	R/W	1b	**PLL Power Down Control (PPDC)** 0: PLL will not be power-down by software until VSTBY is not supplied. Setting PD bit in PCON will enter an EC Doze mode. 1: PLL will be power down after setting PD bit in PCON and enter an EC power-down mode.

7.6.3.5 Auto Clock Gating (AUTOCG)

This register is reset by VSTBY Power-Up reset only.

For the PS/2 module, normally it can not be accomplished to gate the clock of PS/2 module in the Idle/Doze mode if it's clock-gated by PS2CG bit since the clock of PS/2 module should be released immediately after an activity on PS/2 interface. However, it can be accomplished by setting APS2CG bit with enabling its interrupt path.
APS2CG required interrupt path: (corresponding WU10~15) -> INT5 -> 8032 INT1#

For SMB and CIR modules, they are similar.
ASMBCG required interrupt path: (corresponding WU43,44,47) -> INT5 -> 8032 INT1#
CIR required interrupt path: WU41 -> INT5 -> 8032 INT1#

Address Offset: 04h

Bit	R/W	Default	Description
7-4	-	-	**Reserved**
3	R/W	0b	**Auto TMKBC Clock Gating (TMKCG)** 1: Automatically gating clock of TMKBC if TM hardware strap is not enabled or the chip is in the Idle/Doze/Sleep mode. It also overrides TMKCG bit in CGCTRL2R register. 0: TMKBC clock is gated by TMKCG bit in CGCTRL2R register.
2	R/W	0b	**Auto CIR Clock Gating (ACIRCG)** 1: Automatically gating clock of CIR if the corresponding port of GPIO is not in its alternative function or the chip is in the Idle/Doze/Sleep mode. It also overrides CIRCG bit in CGCTRL2R register. 0: CIR clock is gated by CIRCG bit in CGCTRL2R register.
1	R/W	0b	**Auto PS/2 Clock Gating (APS2CG)** 1: Automatically gating clock of PS2 by channel if the corresponding port of GPIO is not in its alternative function or the chip is in the Idle/Doze/Sleep mode. It also overrides PS2CG bit in CGCTRL1R register. 0: PS/2 clock is gated by PS2CG bit in CGCTRL1R register.
0	R/W	0b	**Auto SMB Clock Gating (ASMBCG)** 1: Automatically gating clock of SMB by channel if the corresponding port of GPIO is not in its alternative function or the chip is in the Idle/Doze/Sleep mode. It also overrides SMBCG bit in CGCTRL1R register. 0: SMB clock is gated by SMBCG bit in CGCTRL1R register.

7.6.3.6 PLL Frequency (PLLFREQR)

This register is reset by VSTBY Power-Up reset only.

Address Offset: 06h

Bit	R/W	Default	Description
7-4	-	-	**Reserved**
3-0	R/W	0011b	**PLL Frequency (PLLFREQ)** 0011b: Select 32.3MHz as PLL frequency. 0111b: Select 64.5MHz as PLL frequency. Otherwise: Reserved Read returns the current PLL frequency setting. Writing to this register doesn't change PLL frequency immediately until wakeup from the Sleep mode. Refer to section 7.1.10.5 Code snippet of Changing PLL Frequency on page 152. SCEMINHW field in FLHCTRL2R register may be required before the PLL frequency is changed. This register is only valid for serial flash (LF = 0) and invalid for LPC/FWH flash (LF = 1).

7.7 SM Bus Interface (SMB)

7.7.1 Overview

The SMBUS interface includes three SMBUS channels. The module can maintain bi-directional communication with the external device through SMCLK0/SMDAT0 (Channel A), SMCLK1/SMDAT1 (Channel B), and SMCLK2/SMDAT2 (Channel C) pins. It is compatible with ACCESS BUS and I2C BUS.

7.7.2 Features

- Supports SMBUS 2.0.
- Supports three SMBUS channels.
- Performs SMBUS messages with packet error checking (PEC) either enabled or disabled.

7.7.3 Functional Description

This SMBUS Interface provides an SMBUS master for each channel. The master supports seven command protocols of the SMBUS (see System Management Bus Specification): Quick Command, Send Byte, Receive Byte, Write Byte/Word, Read Byte/Word, Process Call, and Block Read/Write.

7.7.3.1 SMBUS Master Interface

When an interrupt to INTC (INT9 and INT10 for channel A and B respectively) is detected, Software can read the Host Status Register to know the interrupt source. There are 5 interrupt conditions: Byte Done, Failed, Bus Error, Device Error, and Finish.

Quick Command:
In the Quick Command, the Transmit Slave Address Register is sent. Software should force the PEC_EN bit in Host Control Register and I2C_EN bit in Host Control 2 Register to 0 when this command is run.

Send Byte/ Receive Byte:
In the Send Byte command, the Transmit Slave Address and Host Command Registers are sent.
In the Receive Byte command, the Transmit Slave Address Register is sent. The received data is stored in the Host DATA 0 register. Software must force the I2C_EN bit in Host control 2 Register to 0 when this command is run.

Write Byte/ Write Word
In the Write Byte command, the Transmit Slave Address Register, Host Command Register, and Host Data 0 Registers are sent.
In the Write Word command, the Transmit Slave Address Register, Host Command Register, Host Data 0, and Host Data 1 Registers are sent.
In these commands, software must force the I2C_EN bit in Host Control 2 Register to 0.

Read Byte/ Read Word
In the Read Byte command, the Transmit Slave Address Register and Host Command Register are sent. Data is received into the Host Data 0 Register.
In the Read Word command, the Transmit Slave Address Register and Host Command Register are sent. The returned 2 bytes of data are received into the Host Data 0 Register and Host Data 1 Register.
In these commands, software must force the I2C_EN bit in Host Control 2 Register to 0.

Process Call
In the Process Call command, the Transmit Slave Address Register, Host Command Register, Host Data 0 Register, and Host Data1 registers are sent. The returned 2 bytes of data are received into the Host Data 0 Register and Host Data 1 Register. When the I2C_EN bit in Host Control 2 Register is set to 1, the Host Command Register will not be sent.
Note: The Process Call command with I2C_EN bit set and the PEC_EN bit set produce undefined results.

Block Write/ Block Read
In the Block Write command, the Transmit Slave Address Register, Host Command Register, and Host Data 0 (byte count) register are sent. Data is then sent from the Host Block Data Byte register.
In the Block Read commands, the Transmit Slave Address Register, and Host Command Register are sent. The first byte (byte count) received is stored in the Host Data 0 register, and the remaining bytes are stored in the Host Block Data Byte register.
The Byte Done Status bit in the Host Status Register will be set 1 when the master has received a byte (for Block Read commands) or if it has completed transmission of a byte (for Block Write commands).
Note: On the block read command, software shall write 1 to LAST BYTE bit in Host Control Register when the next byte will be the last byte to be received.

I2C Block Read
This command allows the SMBus logic to perform block reads to I2C devices in a 10-bit addressing mode.
In I2C Block Read Command, the Transmit Slave Address Register, Host Command Register, Host Data 0 Register, and Host Data 1 Register are sent. Bit 0 of the Transmit Slave Address Register must be 0. The received data is stored in the Host Block Data Byte register.

7.7.3.2 SMBUS Porting Guide

(1).SMBus Master Interface:

The SMBus controller requires that various data and command registers be setup for the message to be sent. When the START bit in the Host Control Register is set, the SMBus controller will perform the requested transaction. Any register values needed for computation purposes should be saved prior to issuing of a new command.

The “Timing Registers”(22h~28h) should be programmed before the transaction starts. Besides the 25ms Register, all of the other count numbers are based on EC clock. For example, write the 1Bh (37 / FreqEC ~= 4.0us) into the 4.0us register.
(FreqEC is listed in Table 10-1 on page 299 and this example assumes FreqEC = 9.2 MHz.)

The IT8512 SMBus Interface can perform SMBus messages with either packet error checking (PEC) enabled or disabled (PEC_EN bit =1 or 0 in Host Control Register). The actual PEC calculation and checking is performed in software.
Here is the steps the software shall follow to program the registers for various command.

1. Quick Command

(1). Enable the SMBus Host Controller (SMBUS Host Enable bit in Host Control Register 2 is set to 1). I2C_EN bit must be 0 in this command.
(2). In Quick Command, the Transmit Slave Address Register is sent (Software shall write data to the Transmit Slave Address Register).
(3). Start the transaction (Write 41h to the Host Control Register, which will select the “Quick Command”, enable the interrupts, and start the transaction).
(4). When the data transmission was completed, an interrupt is generated. Software can read the Host Status Register to know the source of the interrupt.
Note: After reading the Status Register, the software must write 1 to clear it.

2. Send Byte Command

(1). Enable the SMBus Host Controller (SMBUS Host Enable bit in Host Control Register 2 is set to 1). I2C_EN bit must be 0 in this command.
(2). In Send Byte Command, the Transmit Slave Address Register and Host Command Register are sent (Software shall write data to the Transmit Slave Address Register and Host Command Register). Bit 0 of

the Transmit Slave Address Register must be 0.
(3). Start the transaction (Write 45h to the Host Control Register, which will select the “Send Byte/Receive Byte Command”, enable the interrupts, and start the transaction).
(4). When the data transmission is completed, an interrupt will be generated. Software can read the Host Status Register to know the source of the interrupt.

3. Receive Byte Command

(1). Enable the SMBus Host Controller (SMBUS Host Enable bit in Host Control Register 2 is set to 1). I2C_EN bit must be 0 in this command.
(2). In Receive Byte Command, the Transmit Slave Address Register is sent (Software shall write data to the Transmit Slave Address Register). Bit 0 of the Transmit Slave Address Register must be 1.
(3). Start the transaction (Write 45h to the Host Control Register, which will select the “Send Byte/Receive Byte Command”, enable the interrupts, and start the transaction).
(4). When the data transmission was completed, an interrupt was generated. Software can read the Host Status Register to know the source of the interrupt.
(5). In Receive Byte Command, the received data is stored in the Host Data 0 Register. Software can read this register to get the data.

4. Write Byte Command

(1). Enable the SMBus Host Controller (SMBUS Host Enable bit in Host Control Register 2 is set to 1). I2C_EN bit must be 0 in this command.
(2). In Write Byte Command, the Transmit Slave Address Register, Host Command Register, and Host Data 0 Register are sent (Software shall write data to these registers). Bit 0 of the Transmit Slave Address Register must be 0.
If the Packet Error Checking(PEC) is enabled, software shall write the PEC value to the Packet Error Check Register and this register will be sent, too.
(3). Start the transaction (Write 49h to the Host Control Register, which will select the “Write Byte/Read Byte Command”, enable the interrupts, and start the transaction).
(4). When the data transmission was completed, an interrupt was generated. Software can read the Host Status Register to know the source of the interrupt.

5. Write Word Command

(1). Enable the SMBus Host Controller (SMBUS Host Enable bit in Host Control Register 2 is set to 1). I2C_EN bit must be 0 in this command.
(2). In Write Word Command, the Transmit Slave Address Register, Host Command Register, Host Data 0 Register, and Host Data 1 Register are sent (Software shall write data to these registers). Bit 0 of the Transmit Slave Address Register must be 0.
If the Packet Error Checking (PEC) is enabled, software shall write the PEC value to the Packet Error Check Register. And this register will be sent, too.
(3). Start the transaction (Write 4dh to the Host Control Register, which will select the “Write Word/Read Word Command”, enable the interrupts, and start the transaction).
(4). When the data transmission is completed, an interrupt will be generated. Software can read the Host Status Register to know the source of the interrupt.

6. Read Byte Command

(1). Enable the SMBus Host Controller (SMBUS Host Enable bit in Host Control Register 2 is set to 1). I2C_EN bit must be 0 in this command.
(2). In Read Byte Command, the Transmit Slave Address Register and Host Command Register are sent (Software shall write data to these registers). Bit 0 of the Transmit Slave Address Register must be 1.
(3). Start the transaction (Write 49h to the Host Control Register, which will select the “Write Byte/Read Byte Command”, enable the interrupts, and start the transaction).
(4). When the data transmission is completed, an interrupt will be generated. Software can read the Host

Status Register to know the source of the interrupt.

(5). In Read Byte Command, the data received is stored in the Host Data 0 Register. Software can read this register to get the data.
If the Packet Error Checking (PEC) is enabled, software can read the PEC value from the Packet Error Check Register.

7. Read Word Command

(1). Enable the SMBus Host Controller (SMBUS Host Enable bit in Host Control Register 2 is set to 1). I2C_EN bit must be 0 in this command.
(2). In Read Word Command, the Transmit Slave Address Register and Host Command Register are sent (Software shall write data to these registers). The bit 0 of the Transmit Slave Address Register must be 1.
(3). Start the transaction (Write 4dh to the Host Control Register, which will select the "Write Word/Read Word Command", enable the interrupts, and start the transaction).
(4). When the data transmission is completed, an interrupt will be generated. Software can read the Host Status Register to know the source of the interrupt.
(5). In Read Word Command, the received data is stored in the Host Data 0 Register and Host Data 1 Register. Software can read these registers to get the data.
If the Packet Error Checking(PEC) is enabled, software can read the PEC value from the Packet Error Check Register.

8. Process Call Command

(1). Enable the SMBus Host Controller (SMBUS Host Enable bit in Host Control Register 2 is set to 1).
(2). Set the I2C_EN bit (in Host Control Register 2) to 1 or force it to 0. When the I2C_EN bit is set, the SMBus logic will instead be set to communicate with I2C device. The Process Call Command will skip the command code.
(3). In Process Call Command, the Transmit Slave Address Register, Host Command Register (if I2C_EN = 0), Host Data 0 Register, and Host Data 1 Register are sent (Software shall write data to these registers). Bit 0 of the Transmit Slave Address Register must be 0.
(4). Start the transaction (Write 51h to the Host Control Register, which will select the "Process Call Command", enable the interrupts, and start the transaction).
(5). When the data transmission is completed, an interrupt will be generated. Software can read the Host Status Register to know the source of the interrupt.
(6). In Process Call Command, the received data is stored in the Host Data 0 Register and Host Data 1 Register. Software can read these registers to get the data.
If the Packet Error Checking (PEC) is enabled, software can read the PEC value from the Packet Error Check Register.

Note: The I2C_EN bit and PEC_EN bit can't be set high at the same time. It will produce the undefined results.

9. Block Write Command

(1). Enable the SMBus Host Controller (SMBUS Host Enable bit in Host Control Register 2 is set to 1).
(2). Set the I2C_EN bit (in Host Control Register 2) to 1 or force it to 0. When the I2C_EN bit is set, the SMBus logic will instead be set to communicate with I2C device. The Block Write Command will skip sending the byte count (Host Data 0 Register).
(3). In Block Write Command, the Transmit Slave Address Register, Host Command Register, and Host Data 0 Register (byte count, if I2C_EN = 0) are sent (Software shall write data to these registers). Bit 0 of the Transmit Slave Address Register must be 0. The data is then sent from the Host Block Data Byte Register (Software shall write data to this register).
(4). Start the transaction (Write 55h to the Host Control Register, which will select the "Block Read/Block Write Command", enable the interrupts, and start the transaction).
(5). When the data in Host Block Data Byte Register is sent, an interrupt will be generated. Software can read the Host Status Register to know the source of the interrupt (Byte Done Status is 1).

(6). Software writes the data to the Host Block Data Byte Register, then the data is sent from this register by SMBus logic.
(7). Repeat step (5) and (6) for the other data byte until all of the data were sent.
If the Packet Error Checking(PEC) is enabled, software shall write the PEC value to the Packet Error Check Register and this register will be sent, too.
(8). When the data transmission is completed, an interrupt will be generated. Software can read the Host Status Register to know the source of the interrupt.

Note: The I2C_EN bit and PEC_EN bit can't be set high at the same time. It will produce the undefined results.

10. Block Read Command

(1). Enable the SMBus Host Controller (SMBUS Host Enable bit in Host Control Register 2 is set to 1). I2C_EN bit must be 0 in this command.
(2). In Block Read Command, the Transmit Slave Address Register and Host Command Register are sent (Software shall write data to these registers). Bit 0 of the Transmit Slave Address Register must be 1.
(3). Start the transaction (Write 55h to the Host Control Register, which will select the "Block Read/Block Write Command", enable the interrupts, and start the transaction).
(4). When the byte count and the first byte data are received, an interrupt will be generated. Software can read the Host Status Register to know the source of the interrupt (Byte Done Status is 1).
(5). Software read the data from the Host Data 0 Register to get the byte count, and read the data from the Host Block Data Byte Register to get the first data byte.
(6). When the next data is received, an interrupt will be generated. Software can read the Host Status Register to know the source of the interrupt (Byte Done Status is 1).
(7). Software read the data from the Host Block Data Byte Register to get the data.
(8). Repeat step (6) and (7) until the last byte.
(9). Set the LAST BYTE bit in the Host Control Register to indicate that the next byte will be the last byte to be received.
(10). Get an interrupt and receive the last byte.
If the Packet Error Checking (PEC) is enabled, software can read the PEC value from the Packet Error Check Register.

11. I2C Block Read Command

This command allows the SMBus logic to perform block reads to I2C devices in a 10-bit addressing mode.
(1). Enable the SMBus Host Controller (SMBUS Host Enable bit in Host Control Register 2 is set to 1). I2C_EN bit must be 0 in this command.
(2). In I2C Block Read Command, the Transmit Slave Address Register, Host Command Register, Host Data 0 Register, and Host Data 1 Register are sent (Software shall write data to these registers). Bit 0 of the Transmit Slave Address Register must be 0.
(3). Start the transaction (Write 59h to the Host Control Register, which will select the "I2C Block Read Command", enable the interrupts, and start the transaction).
(4). When the data is received, an interrupt will be generated. Software can read the Host Status Register to know the source of the interrupt (Byte Done Status is 1).
(5). Software can read the data from the Host Block Data Byte Register to get the data.
(6). Repeat step (4) and (5) until the last byte.
(7). Set the LAST BYTE bit in the Host Control Register to indicate that the next byte will be the last byte to be received.
(8). Get an interrupt and receive the last byte.

7.7.4 EC Interface Registers

The SMBUS I/O registers are listed below. The base address for SMBUS is 1C00h.
A, B, and C are for channel A, B, and C respectively.

Table 7-15. EC View Register Map, SMBUS

7	0	Offset
Host Status (HOSTA)(A,B,C)		00h,11h,29h
Host Control (HOCTL)(A,B,C)		01h,12h,2Ah
Host Command (HOCMD)(A,B,C)		02h,13h,2Bh
Transmit Slave Address (TRASLA)(A,B,C)		03h,14h,2Ch
Host Data 0 (D0REG)(A,B,C)		04h,15h,2Dh
Host Data 1 (D1REG)(A,B,C)		05h,16h,2Eh
Host Block Data Byte (HOBDB)(A,B,C)		06h,17h,2Fh
Packet Error Check (PECERC)(A,B,C)		07h,18h,30h
SMBUS Pin Control (SMBPCTL)(A,B,C)		0Ah,1Bh,31h
Host Control2 (HOCTL2)(A,B,C)		10h,21h,32h
4.7 μs Low Register (4P7USL)		22h
4.0 μs High Register (4P0USH)		23h
300 ns Register (300NS)		24h
250 ns Register (250NS)		25h
25 ms Register (25MS)		26h
45.3 μs Low Register (45P3USL)		27h
45.3 μs High Register (45P3USH)		28h
4.7 μs and 4.0 μs High Register (4P7A4P0H)		33h

7.7.4.1 Host Status Register (HOSTA)

All status bits are set by hardware and cleared by writing a one to the particular bit position by the software. Software can read this register to know the source of the interrupt (Master Interface).

Address Offset: **Channel A: 00h**
Channel B: 11h
Channel C: 29h

Bit	R/W	Default	Description
7	R/WC	00h	**Byte Done Status (BDS)** This bit will be set 1 when the host controller has received a byte (for Block Read commands) or if it has completed the transmission of a byte (for Block Write commands).
6-5	-	00h	**Reserved**
4	R/WC	00h	**Failed (FAIL)** 0: This bit is cleared by writing a 1 to the bit position. 1: This bit is set when KILL is set.
3	R/WC	00h	**Bus Error (BSER)** 0: This bit is cleared by writing a 1 to the bit position. 1: The source of the interrupt is that the SMBUS has lost arbitration.
2	R/WC	00h	**Device Error (DVER)** 0: This bit is cleared by writing a 1 to this bit's position. 1: This bit is set in one of the following conditions: (1)Illegal Command Field. (2)25ms Time-out Error. (3)Not response ACK.
1	R/WC	00h	**Finish Interrupt (FINTR)** This bit will be set by termination of a command. 0: This bit is cleared by writing 1 to this position. 1: The source of the interrupt is the stop condition detected.
0	R	00h	**Host Busy (HOBY)** 0: This bit is cleared when the current transaction is completed. 1: This bit is set while the command is in operation.

7.7.4.2 Host Control Register (HOCTL)

Address Offset: Channel A: 01h
Channel B: 12h
Channel C: 2Ah

Bit	R/W	Default	Description
7	R/W	00h	**PEC Enable (PEC_EN)** 0: The transaction without the PEC (Packet Error Checking) phase0 appended 1: The transaction with the PEC phase appended.
6	W	00h	**Start (SRT)** 0: This bit will always return 0 on reads. 1: When this bit is set, the SMBUS host controller will perform the requested transaction.
5	W	00h	**Last Byte (LABY)** This bit is used for Block Read command. 0: This bit will always return 0 on reads. 1: Software shall write 1 to this bit when the next byte will be the last byte to be received for the block read command.
4-2	R/W	00h	**SMBUS Command (SMCD)** These bits indicate which command will be performed. Bit 0 of the Transmit Slave Address Register determines if this is a read or write command. 000:Quick Command 001:Send Byte/ Receive Byte 010:Write Byte/ Read Byte 011:Write Word/ Read Word 100:Process Call 101:Block Read/ Block Write 110:I2C Block Read 111:Reserved
1	R/W	00h	**Kill (KILL)** 0: Normal SMBUS Host controller functionality. 1: When this bit is set, kill the current host transaction. This bit, once set, must be cleared by software to allow the SMBUS Host controller to function normally.
0	R/W	00h	**Host Interrupt Enable (INTREN)** 0: Disable. 1: Enable the generation of an interrupt for the master interface

7.7.4.3 Host Command Register (HOCMD)

Address Offset: Channel A: 02h
Channel B: 13h
Channel C: 2Bh

Bit	R/W	Default	Description
7-0	R/W	00h	**Host Command Register (HCREG)** These bits are transmitted in the command field of the SMBUS protocol.

7.7.4.4 Transmit Slave Address Register (TRASLA)

Address Offset: Channel A: 03h
Channel B: 14h
Channel C: 2Ch

Bit	R/W	Default	Description
7-1	R/W	00h	**Address (ADR)** Address of the targeted slave.
0	R/W	00h	**Direction (DIR)** Direction of the host transfer. 0: Write 1: Read

7.7.4.5 Data 0 Register (D0REG)

Address Offset: Channel A: 04h
Channel B: 15h
Channel C: 2Dh

Bit	R/W	Default	Description
7-0	R/W	00h	**Data 0 (D0)** These bits contain the data sent in the DATA0 field of the SMBUS protocol. For block write commands, this register reflects the number (from 1 to 32) of bytes to transfer.

7.7.4.6 Data 1 Register (D1REG)

Address Offset: Channel A: 05h
Channel B: 16h
Channel C: 2Eh

Bit	R/W	Default	Description
7-0	R/W	00h	**Data 1 (D1)** These bits contain the data sent in the DATA1 field of the SMBUS protocol.

7.7.4.7 Host Block Data Byte Register (HOBDB)

Address Offset: Channel A: 06h
Channel B: 17h
Channel C: 2Fh

Bit	R/W	Default	Description
7-0	R/W	00h	**Block Data (BLDT)** For a block write command, data is sent from this register. On block read command, the received data is stored in this register.

7.7.4.8 Packet Error Check Register (PECERC)

Address Offset: Channel A: 07h
Channel B: 18h
Channel C: 30h

Bit	R/W	Default	Description
7-0	R/W	00h	**PEC Data (PECD)** These bits are written with the 8-bit CRC value that is used as the SMBUS PEC data prior to a write transaction. For read transactions, the PEC data is loaded from the SMBUS into this register and is then read by software.

7.7.4.9 SMBUS Pin Control Register (SMBPCTL)

Address Offset: Channel A: 0Ah
Channel B: 1Bh
Channel C: 31h

Bit	R/W	Default	Description
7-3	-	00h	**Reserved**
2	R/W	1b	**SMCLK Control (SMBC)** 0: SMCLK0/1/2 pin will be driven low regardless of what the other SMB logic will be. 1: The SMCLK0/1/2 pin will not be driven low. The other SMBUS logic controls this pin.
1	R	-	**SMDAT Current State (SMBDCS)** This bit returns the value of the SMDAT0/1/2 pin. 0: Low 1: High
0	R	-	**SMCLK Current State (SMBCS)** This bit returns the value of the SMCLK0/1/2 pin. 0: Low 1: High

7.7.4.10 Host Control Register 2 (HOCTL2)

Address Offset: Channel A: 10h
Channel B: 21h
Channel C: 32h

Bit	R/W	Default	Description
7-2	-	00h	**Reserved**
1	R/W	00h	**I2C Enable (I2C_EN)** 0: SM BUS behavior. 1: Enable to communicate with I2C device. When this bit is set, the SMBUS logic will instead be set to communicate with I2C devices. This forces the following changes: (1) The Process Call command will skip the Command code. (2) The Block Write command will skip sending the Byte Count.
0	R/W	00h	**SMBUS Host Enable (SMHEN)** 0: Disable the SMBUS Host Controller. 1: The SMB Host interface is enabled to execute commands.

7.7.4.11 4.7 μs Low Register (4P7USL)

The following registers (22h-28h,33h) define the SMCLK0/1/2 and SMDAT0/1/2 timing.

Address Offset: 22h

Bit	R/W	Default	Description
7-0	R/W	00h	**4.7 μs Low Register (4P7USL)** This 4.7 μs Low Register and 4.7 μs high bit (in the 4.7 μs and 4.0 μs High Register) define the count number for the 4.7 μs counter. The 4.7 μs is (count number / FreqEC). (FreqEC is listed in Table 10-1 on page 299)

7.7.4.12 4.0 μs Low Register (4P0USL)

Address Offset: 23h

Bit	R/W	Default	Description
7-0	R/W	00h	**4.0 μs Low Register (4P0USL)** This 4.0 μs Low Register and 4.0 μs high bit (in the 4.7 μs and 4.0 μs High Register) define the count number for the 4.0 μs counter. The 4.0 μs is is (count number / FreqEC). (FreqEC is listed in Table 10-1 on page 299)

7.7.4.13 300 ns Register (300NSREG)

Address Offset: 24h

Bit	R/W	Default	Description
7-0	R/W	00h	**300ns Register (300NS)** This field defines the SMDAT0/1/2 hold time. This byte is the count number of the counter for 300 ns. The 300 ns is calculated by (count number / FreqEC). (FreqEC is listed in Table 10-1 on page 299)

7.7.4.14 250 ns Register (250NSREG)

Address Offset: 25h

Bit	R/W	Default	Description
7-0	R/W	00h	**250ns Register (250NS)** This field defines the SMDAT0/1/2 setup time. This byte is the count number of the counter for 250 ns. The 250 ns is calculated by (count number / FreqEC). (FreqEC is listed in Table 10-1 on page 299)

7.7.4.15 25 ms Register (25MSREG)

Address Offset: 26h

Bit	R/W	Default	Description
7-0	R/W	00h	**25 ms Register (25MS)** This field defines the SMCLK0/1/2 clock low timeout. This byte is the count number of the counter for 25 ms. The 25 ms is calculated by (count number *1.024 kHz).

7.7.4.16 45.3 μs Low Register (45P3USLREG)

Address Offset: 27h

Bit	R/W	Default	Description
7-0	R/W	00h	**45.3 μs Low Register (45P3USLOW)** This 45.3 μs Low Register, 45.3 μs High Register, 4.7us Low Register and 4.7us high bit (in the 4.7μs And 4.0 μs High Register) define the SMCLK0/1/2 high periodic (maximal). (45.3μs + 4.7μs=50μs) This byte is the count number bits [7:0] of the counter for 45.3 μs. The 45.3 μs is calculated by (count number[15:0] / FreqEC). (FreqEC is listed in Table 10-1 on page 299)

7.7.4.17 45.3 μs High Register (45P3USHREG)

Address Offset: 28h

Bit	R/W	Default	Description
7-0	R/W	00h	**45.3 μs High Register (45P3USHGH)** This 45.3 μs Low Register, 45.3 μs High Register, 4.7us Low Register and 4.7us high bit (in the 4.7μs And 4.0 μs High Register) define the SMCLK0/1/2 high periodic (maximal). (45.3 μs + 4.7μs=50μs). This byte is the count number bits [15:8] of the counter for 45.3 μs. The 45.3 μs is calculated by (count number[15:0] / FreqEC). (FreqEC is listed in Table 10-1 on page 299)

7.7.4.18 4.7 μs And 4.0 μs High Register (4p7A4P0H)

Address Offset: 33h

Bit	R/W	Default	Description
7-2	-	-	**Reserved**
1	R/W	00h	**4.0 μs High Bit (4P0USH)** This bit is bit 8 of the count number for the 4.0 μs counter. This 4.0 μs Low Register and 4.0μs High Bit define the count number for the 4.0 μs counter.
0	R/W	00h	**4.7 μs High Bit (4P7USH)** This bit is bit 8 of the count number for the 4.7 μs counter. This 4.7 μs Low Register and 4.7μs High Bit define the count number for the 4.7 μs counter.

7.8 PS/2 Interface

7.8.1 Overview

The PS/2 device uses a two-wire bi-directional interface for data transmission. The device consists of three identical channels. Each of the three channels provides two signals (CLK and DATA line) to communicate with the auxiliary device. The PS/2 interface also connects the CLK line and DATA line to the WUC (WU10-WU17) to wake-up the 8032 when these lines are toggled.

CLK line and DATA line are the same as PS2CLKn and PS2DATn (n=0,1 or 2) pins. Refer to Table 5-6 on page 16 for the details.

7.8.2 Features

- Supports three PS/2 channels.
- Supports hardware/software mode selection.
- Three interrupt features are available: Start Interrupt, Transaction Done Interrupt, and Software Mode Interrupt (INT16, INT18, INT19 and INT20).

7.8.3 Functional Description

The PS/2 Interface has two operation methods: Hardware mode and software mode. When the hardware mode is enabled, the PS/2 interface can perform automatic reception or transmission depending on the TRMS bit in the PSCTL register. When the hardware mode is disabled (software mode is enabled), the PS/2 CLK line and DATA line are controlled by the firmware via the CCLK bit and CDAT bit in the PSCTL register. The following sections will describe how to use the PS/2 interface.

7.8.3.1 Hardware Mode Selected

Receive Mode
Here are the steps the host shall follow to receive data from a PS/2 device.

1. Enable the hardware mode, select the receive mode, and release the CLK line and DATA line (Write 07h to the PS/2 Control Register).
2. Enable the interrupts. (TDIE bit in PS/2 Interrupt Control Register must be set to 1 because when the data transmission is completed, the data in PS/2 Data Register needs to be read.)

After these steps, the PS/2 interface is ready to receive data. When the data transmission is completed, an interrupt signal is set high (Transaction Done interrupt). The status (Transaction Done Status) can be read from PS/2 Status Register and the received data can be read from the PS/2 Data Register. The PS/2 CLK line will be held low until the PS/2 Data Register is read.

Transmit Mode
Here are the steps the host shall follow to send data to a PS/2 device.
1. Enable the hardware mode, select the transmit mode, and pull the CLK line low and DATA line high (Write 0Dh to the PS/2 Control Register).
2. Enable the interrupts. (TDIE bit in PS/2 Interrupt Control Register must be set to 1 because when the data transmission is completed, the data in PS/2 Status Register needs to be read.)
3. Write the data to be transmitted to the PS/2 Data Register.
4. Pull the DATA line low (Write 0Ch to the PS/2 Control Register).
5. Pull the CLK line high (Write 0Eh to the PS/2 Control Register).

After these steps, the PS/2 interface is ready to transmit data. When the data transmission is completed, an interrupt signal is set high (Transaction Done interrupt). The status (Transaction Done Status) can be read from PS/2 Status Register. The CLK line will be held low until the PS/2 Status Register is read.

Input Signal Debounce
This PS/2 Interface performs a debounce operation on the CLK input signal before determining its logical value. When this operation is enabled (DCEN bit in the PS/2 Control Register is set to 1), the CLK input signal must be stable for at least 4 clock cycles.

7.8.3.2 Software Mode Selected

Software Control PS/2 CLK line and DATA line
When the Software Mode is selected (PSHE=0 in PS/2 Control Register), the software can control the PS/2 CLK line and DATA line. The CCLK bit and CDAT bit in the PS/2 Control Register control the CLK line and DATA line. When one of these bits is cleared, the relevant pin is held low. When one of these bits is set, the relevant pin is pulled high.

Software Control the Interrupt
When the PS/2 Hardware Enable bit is cleared (PSHE=0 in PS/2 Control Register) and the Software Mode Interrupt Enable bit is set (SMIE=1 in PS/2 Interrupt Control Register), the software can control the PS/2 interrupt. The interrupt is set high when the CCLK bit in PS/2 Control Register is set high. If such an interrupt is not desired, clear the Software Mode Interrupt Enable bit (SMIE=0 in PS/2 Interrupt Control Register).

7.8.4 EC Interface Registers

The PS/2 interface registers are listed below. The base address for PS/2 is 1700h.

Table 7-16. EC View Register Map, PS/2

7	0	Offset
PS/2 Control Register 1 (PSCTL1)		00h
PS/2 Control Register 2 (PSCTL2)		01h
PS/2 Control Register 3 (PSCTL3)		02h
PS/2 Interrupt Control Register 1 (PSINT1)		04h
PS/2 Interrupt Control Register 2 (PSINT2)		05h
PS/2 Interrupt Control Register 3 (PSINT3)		06h
PS/2 Status Register 1 (PSSTS1)		08h
PS/2 Status Register 2 (PSSTS2)		09h
PS/2 Status Register 3 (PSSTS3)		0Ah
PS/2 Data Register 1 (PSDAT1)		0Ch
PS/2 Data Register 2 (PSDAT2)		0Dh
PS/2 Data Register 3 (PSDAT3)		0Eh

7.8.4.1 PS/2 Control Register 1-3 (PSCTL1-3)

This register controls the operation of the PS/2 interface. PS/2 Control Register 1-3 are for channel 1-3 respectively.

Address Offset: 00h~02h

Bit	R/W	Default	Description
7-5	-	000b	**Reserved**
4	R/W	0b	**Debounce Circuit Enable (DCEN)** 0: The debounce circuit is disabled. 1: The debounce circuit is enabled.
3	R/W	0b	**Transmit / Receive Mode Selection (TRMS)** 0: Receive mode is selected. 1: Transmit mode is selected.
2	R/W	0b	**PS/2 Hardware Enable (PSHE)** When this bit is set to 1, the PS/2 channel can perform automatic reception or transmission. When this bit is 0, the channel's CLK and DATA lines are controlled by the CCLK and CDAT bits in this register. 0: PS/2 hardware mode is disabled (Software mode is enabled). 1: PS/2 hardware mode is enabled.
1	R/W	0b	**Control CLK Line (CCLK)** This bit can control the CLK line. 0: The CLK line is held low. 1: The CLK line is pulled high.
0	R/W	1b	**Control DATA Line (CDAT)** This bit can control the DATA line. 0: The DATA line is held low. 1: The DATA line is pulled high.

7.8.4.2 PS/2 Interrupt Control Register 1-3 (PSINT1-3)

This register enables or disables various interrupts sources. PS/2 Interrupt Control Register 1-3 are for channel 1-3 respectively.

Address Offset: 04h~06h

Bit	R/W	Default	Description
7-3	-	00000b	**Reserved**
2	R/W	0b	**Transaction Done Interrupt Enable (TDIE)** Enable or disable the interrupt generation when the Transaction Done status occurs. 0: Disable the interrupt. 1: Enable the interrupt.
1	R/W	0b	**Start Interrupt Enable (SIE)** Enable or disable the interrupt generation when the Start status occurs. 0: Disable the interrupt. 1: Enable the interrupt.
0	R/W	0b	**Software Mode Interrupt Enable (SMIE)** Enable or disable the interrupt generation when the PS/2 hardware is disabled. The CCLK bit in PSCTL register can control the interrupt output when this bit is set to 1 and PS/2 hardware is disabled. 0: Disable the interrupt. 1: Enable the interrupt.

7.8.4.3 PS/2 Status Register 1-3 (PSSTS1-3)

This register contains the status information on the data transfer on the PS/2. Status Register 1-3 are for channel 1-3 respectively.

Address Offset: 08h~0Ah

Bit	R/W	Default	Description
7-6	-	00b	**Reserved**
5	R	0b	**Frame Error (FER)** This bit is 1 when the stop bit in a received frame was detected low.
4	R	0b	**Parity Error (PER)** This bit is 1 when a parity error condition occurs.
3	R	0b	**Transaction Done Status (TDS)** This bit is 1 when a PS/2 data transfer is done.
2	R	0b	**Start Status (SS)** This bit is 1 when a start bit is detected.
1	R	-	**CLK Line Status (CLS)** Reading this bit returns the current status of the PS/2 CLK line.
0	R	-	**DATA Line Status (DLS)** Reading this bit returns the current status of the PS/2 DATA line.

7.8.4.4 PS/2 Data Register 1-3 (PSDAT1-3)

In receive mode, this register holds the data received from the PS/2 device. In transmit mode, the data in this register is transmitted to the PS/2 device. Data Register 1-3 are for channel 1-3 respectively.

Address Offset: 0Ch~0Eh

Bit	R/W	Default	Description
7-0	R/W	00h	**Data (DAT)** Holds the data received from the PS/2 device in the receive mode or the data which will be transmitted in the transmit mode.

7.9 Digital To Analog Converter (DAC)

7.9.1 Overview

The DAC interface is used as a communication interface between the embedded controller and DAC.

7.9.2 Feature

- Supports 6-channel D/A converter
- 8-bit resolution
- Independent enable signals for each channel
- Power-down function

7.9.3 Functional Description

The DAC interface has six channels. Each channel generates an output in the range of 0V to AVCC with eight-bit resolution. When a DAC channel is enabled, its output is defined by the value written to its DACDAT register. DACDAT 0-5 control channel 0-5 respectively. The 0V output is obtained for a value of 00h in the DACDAT register. The AVCC output is obtained for a value of FFh in the DACDAT register. In power-down mode (POWDNx=1 in DAC Power Down Register), the DAC output is 0V.

DAC analog circuit has less power consumption if it is power-down. POWDNx bit in DAC Power Down Register controls this and it's cleared during EC domain reset.
The firmware should clear POWDN bit in the DAC Power Down Register before entering Idle/Doze/Sleep mode.

7.9.4 EC Interface Registers

The DAC interface registers are listed below. The base address for DAC is 1A00h.

Table 7-17. EC View Register Map, DAC

7	0	Offset
DAC Enable Register (DACENREG)		00h
DAC Power Down Register (DACPDREG)		01h
DAC Data Channel 0 (DACDAT0)		02h
DAC Data Channel 1 (DACDAT1)		03h
DAC Data Channel 2 (DACDAT2)		04h
DAC Data Channel 3 (DACDAT3)		05h
DAC Data Channel 4 (DACDAT4)		06h
DAC Data Channel 5 (DACDAT5)		07h

7.9.4.1 DAC Enable Register (DACENREG)

This register is used to enable the DAC channel.

Address Offset: 0h

Bit	R/W	Default	Description
7-6	--	--	**Reserved**
5	R/W	0h	**DAC Channel 5 Enable (DACEN5)** This bit is used to enable the DAC channel 5. 0: Disable 1: Enable
4	R/W	0h	**DAC Channel 4 Enable (DACEN4)** This bit is used to enable the DAC channel 4. 0: Disable 1: Enable
3	R/W	0h	**DAC Channel 3 Enable (DACEN3)** This bit is used to enable the DAC channel 3. 0: Disable 1: Enable
2	R/W	0h	**DAC Channel 2 Enable (DACEN2)** This bit is used to enable the DAC channel 2. 0: Disable 1: Enable
1	R/W	0h	**DAC Channel 1 Enable (DACEN1)** This bit is used to enable the DAC channel 1. 0: Disable 1: Enable
0	R/W	0h	**DAC Channel 0 Enable (DACEN0)** This bit is used to enable the DAC channel 0. 0: Disable 1: Enable

7.9.4.2 DAC Power Down Register (DACPDREG)

When the bit in this register is set, the respective DAC channels will be power-down.

Address Offset: 01h

Bit	R/W	Default	Description
7-6	-	-	**Reserved**
5	R/W	1b	**DAC Channel 5 Power Down (POWDN5)** 0: The DAC channel 5 is not power-down. 1: The DAC channel 5 is power-down.
4	R/W	1b	**DAC Channel 4 Power Down (POWDN4)** 0: The DAC channel 4 is not power-down. 1: The DAC channel 4 is power-down.
3	R/W	1b	**DAC Channel 3 Power Down (POWDN3)** 0: The DAC channel 3 is not power-down. 1: The DAC channel 3 is power-down.
2	R/W	1b	**DAC Channel 2 Power Down (POWDN2)** 0: The DAC channel 2 is not power-down. 1: The DAC channel 2 is power-down.
1	R/W	1b	**DAC Channel 1 Power Down (POWDN1)** 0: The DAC channel 1 is not power-down. 1: The DAC channel 1 is power-down.
0	R/W	1b	**DAC Channel 0 Power Down (POWDN0)** 0: The DAC channel 0 is not power-down. 1: The DAC channel 0 is power-down.

7.9.4.3 DAC Data Channel 0~5 Register (DACDAT0~5)

The data in these registers will be loaded into channel 0~5.

Address Offset: Channel 0: 02h
Channel 1: 03h
Channel 2: 04h
Channel 3: 05h
Channel 4: 06h
Channel 5: 07h

Bit	R/W	Default	Description
7-0	R/W	-	**DAC Data Register (DACDAT)** 8 bit data will be loaded to the DAC for D/A operation.

7.10 Analog to Digital Converter (ADC)

7.10.1 Overview

The ADC(analog to digital converter) provides an accurate method for measuring slow changing voltages. The module can measure the channel up to twelve-voltage with 10-bit resolution.

7.10.2 Features

- Supports 10-bit resolution after software calibration and 0 to 3V input voltage range
- Supports an digital low pass filter for spike smoothing
- Supports four-voltage buffers
- Supports fast AD conversion of 12 channels within 100 ms
- Supports programmable conversion-start delay to guarantee input setting time
- Polling or interrupt-driven interface

7.10.3 Functional Description

Figure 7-19. ADC Channels Control Diagram

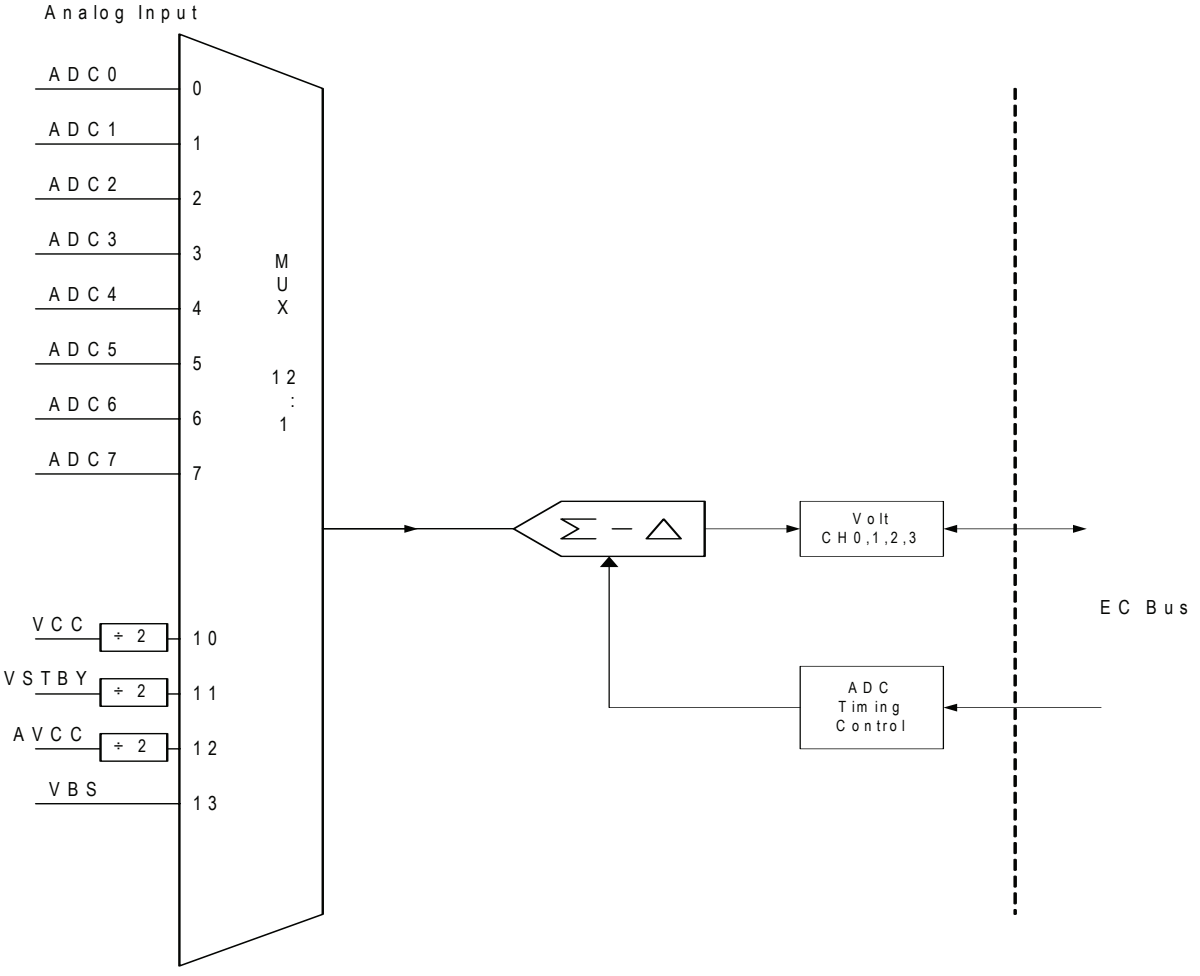

7.10.3.1 ADC General Description

Inputs
The ADC has 12 inputs (ADC0-7, ADC10~13) divided into two groups described as the following:
• External Voltage (ADC0-7):
These are for DC voltage sources.

• Internal Voltage (ADC10-13):
These are connected to the internal supply voltages of the device (VCC, VSTBY AVCC and VBAT).
The input voltages of ADC10-12 are divided by 2 before being input to analog multiplexer while ADC13 is not divided by 2.

A/D Converter
The sigma-delta high-resolution A/D converter receives the selected input with a 16 to 1 analog multiplier and converts it. The result of the conversion is 14-bit signed integer (2's complement) and it is a 10-bit, unsigned integer for voltage inputs after software calibration process.

For the software calibration flow, refer to section 7.10.5 ADC Programming Guide.

ADC Cycle
The ADC has four output buffers: These are for the voltage channel. The buffer for voltage measurement channels holds the current data until the next same volt channel measurement is completed after one ADC cycle is finished. An ADC cycle includes measurements of all four channels. The first measurement is a voltage channel 0 and followed by voltage channel 1, 2, 3. After an A/D conversion is completed for a certain channel, its relative bit of the Data Valid (DATVAL bit in VCH0CTL, VCH1CTL, VCH2CTL and VCH3CTL register) flag is set that represents the channel of data is available and EC can read out.

Channel Conversion Time
If channel delay uses a default value, which means VOLDLY is delayed 256 k units, SCLKDIV factor in ADCCTL register is also set by default, and DFILEN is set to 1, the one channel conversion time is about 3.6msec. If DFILEN is set to 0, the one channel conversion time is about 780usec.

Interrupt to INTC
ADC interrupt (INT8) will be active if end-of-cycle, voltage channel 0 data valid, voltage channel 1 data valid, voltage channel 2 data valid or voltage channel 3 data valid is true. See also INTECEN, INTDVEN0, INTDVEN1, INTDVEN2 and INTDVEN3.

7.10.3.2 Voltage Measurement and Automatic Hardware Calibration

The ADC converts the un-calibrated input voltage signal into a 14-bit singed integer (2's complement) in data buffer VCHDiATL and VCHDiATM when AHCE(Automatic Hardware Calibration Enable) is cleared(default), and converted into a 10-bit unsigned integer in data buffer VCHDiATL and VCHDiATM when AHCE(Automatic Hardware Calibration Enable) is set. The automatic hardware calibration is used for the alternative of the software calibration flow. The input signal should be applied relative to the AGND pin and should range from 0V to 3V.
The following should explain the input voltage based on the reading from the Voltage/Channel Data result (VCHiDATL field in VCHiDATM register for voltage).

Example (Refer to the bottom of Figure 7-20 on page 219 for the details:
The un-calibrated input data is 14-bit singed integer (2's complement) in data buffer VCHiDATx.
An input signal equal to 3.0V is about 0FFFh.
An input signal equal to 1.5V is about 0000h.
An input signal equal to 0.0V is about 3000h.
After software calibration flow, it is a 10-bit unsigned integer:
3.0V (about 0FFFh) is calibrated as 3FFh.

1.5V (about 0000h) is calibrated as 200h.
0.0V (about 3000h) is calibrated as 000h.

Changing the input selection for a new measurement channel (voltage), the software needs to set a delay time to prevent the result of an unintended ADC operation. The ADC waits for a programmable delay time between the selection of the input to be measured and the beginning of the A/D conversion.

7.10.3.3 ADC Operation

Reset
The ADC is disabled, and all interrupt is masked and all event status bits reset. The selected input for all four-voltage channels is disabled (Bit4-0 of the VCHiCTL register is set to Fh).

ADC Clock
The ADC clock is generated by dividing the EC clock by a factor defined in SCLKDIV in ACLKCTL register. The ADC clock must be at a frequency of 0.5 MHz. SCLKDIV must be programmed before enabling the ADC.

Initializing the ADC
The ADC must be initialized before ADC is enabled (ADCEN in the ADCCFG register is set to 1). The followings need to be done before the ADC is enabled.

1. Set AINITB@ADCSTS = 1 then clear it (only once after VSTBY power on)
2. ADCEN bit in ADCCNF register is cleared.
3. Programming (SCLKDIV factor in ADCCTL register).
4. Voltage Channel Delay.
5. Channel Select in VCHiCTL register
6. Hardware voltage calibration information G and O needs to be done by setting calibration active via KDCTL register.

Enabling the ADC
After the ADC is enabled, the voltage channel is measured as long as the ADCEN is set 1 and when the voltage channel is selected. The measurement operations may be enabled or disabled individually.

Disabling the ADC
ADC analog circuit has less power consumption if it is disabled. ADCEN bit in ADCCFG register controls this and it's cleared at EC Domain Reset.
The firmware should clear ADCEN bit before entering Idle/Doze/Sleep mode.

7.10.4 EC Interface Registers

The ADC control/status and data out registers set interfaces with the EC through the EC Dedicated bus. These registers are mapped in the address space of the EC. The registers are listed below and the base address is 1900h.

Table 7-18. EC View Register Map, ADC

7	0	Offset
ADC Status (ADCSTS)		00h
ADC Configuration (ADCCFG)		01h
ADC Clock Control (ADCCTL)		02h
Voltage Channel 0 Channel Control (VCH0CTL)		04h
Calibration Data Control Register (KDCTL)		05h
Voltage Channel 1 Control (VCH1CTL)		06h
Voltage Channel 1 Data Buffer LSB (VCH1DATL)		07h
Voltage Channel 1 Data Buffer MSB (VCH1DATM)		08h
Voltage Channel 2 Control (VCH2CTL)		09h
Voltage Channel 2 Data Buffer LSB (VCH2DATL)		0ah
Voltage Channel 2 Data Buffer MSB (VCH2DATM)		0bh
Voltage Channel 3 Control (VCH3CTL)		0ch
Voltage Channel 3 Data Buffer LSB (VCH3DATL)		0dh
Voltage Channel 3 Data Buffer MSB (VCH3DATM)		0eh
Voltage High Scale Calibration Data Buffer LSB (VHSCDBL)		14h
Voltage High Scale Calibration Data Buffer MSB (VHSCDBM)		15h
Voltage Channel 0 Data Buffer LSB (VCH0DATL)		18h
Voltage Channel 0 Data Buffer MSB (VCH0DATM)		19h
Voltage High Scale Gain-error Calibration Data Buffer LSB (VHSGCDBL)		1Ch
Voltage High Scale Gain-error Calibration Data Buffer MSB (VHSGCDBM)		1Dh

For a summary of the abbreviations used for register type, see “Register Abbreviations and Access Rules”

7.10.4.1 ADC Status Register (ADCSTS)

This register indicates the global status of the ADC module. ADCSTS is cleared (00h) on VSTBY Power-Up reset; on other resets, bit 2 is unchanged and other bits are cleared.

Address Offset: 00h

Bit	R/W	Default	Description
7	R/W	0b	**Filter High Accuracy (FIRHIACC)** 0: Digital filter operation at low accuracy 1: Digital filter operation at high accuracy
6	-	0b	**Reserved**
5-4	R/W	00b	**Decimation Filter Ratio (DFR)** These bits determine the down-sampling rate to remove the quantization noise. **Bits 5 4** 0 0: 32 Others: Reserved
3	R/W	0b	**Analog Accuracy Initialization Bit (AINITB)** Write 1 to this bit and write 0 to this bit immediately once and only once during the firmware initialization and do not write 1 again after initialization since IT8512 takes much power consumption if this bit is set as 1. Writing steps about this bit should be done before ADCEN bit is set in ADCCFG register. 1: Start ADC accuracy initialization. 0: Stop ADC accuracy initialization.
2	R/W	0b	**ADC Power Statement (ADCPS)** This bit remains zero when ADC power is in a normal state. When ADC power shuts down or failure occurs, the software must program this bit to one. The program must be waited at least 200usec for ADC internal initialization after power on. 0: indicate the ADC power in a normal state. 1: indicate the ADC power in a shut down or failure state.
1	R/WC	0b	**Data Overflow Event (DOVE)** Measurement data from the previous cycle was overwritten with data From the current cycle before being read. In the event of a data overflow, the DATVAL bit remains set and new data is placed in Channel Data Buffer register. This bit is cleared by writing 1 to it; writing 0 is ignored. 0: No overflow (default) 1: Overflow
0	R/WC	0b	**End-of-Cycle Event (EOCE)** End of ADC cycle; all enabled measurements (up to four) are completed. For each of the enabled channels, the DATVAL bit is set to 1 and the data stored in Channel Data Buffer register respectively. 0: Cycle in progress (default) 1: End of ADC cycle

7.10.4.2 ADC Configuration Register (ADCCFG)

This register controls the operation and global configuration of the ADC module.

Address Offset: 01h

Bit	R/W	Default	Description
7-6		10b	**Reserved**
5	R/W	0b	**Digital Filter Enable (DFILEN)** Enables the digital filter operation for spike smoothing on ADC output signal. Setting this bit to 1 enables the digital low pass filter to prevent unwanted signal changes based on the ADC conversion and the smoothing data is read on the VCHxDAT register. When this digital filter is enable, the EC Clock Division Factor (SCLKDIV) must be set to a value which is larger than 15 (decimal), then digital filter will work fine. 0: Disabled digital filter operation(default) 1: Enabled digital filter operation on ADC output signal when ADCEN is set 1. If ADCEN is cleared, this bit can be ignored.
4-3	-	-	**Reserved**
2	R/W	0b	**Interrupt from End-of-Cycle Event Enable (INTECEN)** Enables an ADC interrupt generated by End-of ADC-cycle event (EOCEV in ADCSTS register). 0: Disabled (default) 1: Enabled interrupt by EOCEV event
1	R/W	0b	**Reserved**
0	R/W	0b	**ADC Module Enable (ADCEN)** Controls ADC operation or not 0: ADC disabled (default), power-down 1: ADC enabled

7.10.4.3 ADC Clock Control Register (ADCCTL)

This register controls the EC clock to ADC clock division.

Address Offset: 02h

Bit	R/W	Default	Description
7-6	-	0h	**Reserved**
5-0	R/W	15h	**EC Clock Division Factor (SCLKDIV)** Divide the EC clock into the ADC clock. The EC clock is different from the ADC clock. ADC Clock Frequency = (EC Clock Frequency) / (SCLKDIV + 1) EC clock frequency is listed in Table 10-1 on page 299. The resulting ADC clock frequency should be less than 0.5 MHz when DFILEN is cleared, and SCLKDIV needs to be larger than 20(decimal) when DFILEN is set. It is recommended to use the default SCLKDIV value for a good performance. Range: 4 to 63; if values 0 to 3 are set and may result in undetermined ADC behavior.

7.10.4.4 Voltage Channel 0 Control Register (VCH0CTL)

This register both controls the operation and indicates the status of the Voltage channel.

Address Offset: 04h

Bit	R/W	Default	Description
7	R/WC	0b	**Data Valid (DATVAL)** The VCH0DATx is available for reading when DATAVAL is set. This bit is cleared when the ADC module is disabled (ADCEN in ADCCFG register is cleared) or by writing 1 to it. 0: No valid data in VCH0DATx register (default) 1: End of conversion – new data is available in VCH0DATx
6	R/W	0b	**Reserved**
5	R/W	0b	**Interrupt from Data Valid Enable (INTDVEN)** Enabled to the ADC Interrupt generated by Data valid event of voltage channel 0. 0: Disabled (default) 1: Enabled – ADC Interrupt from local DATVAL
4-0	R/W	11111b	**Selected Input (SELIN)** Indicates which Volt channel input is selected for measurement. The channel selection must be programmed before the channel is measured. **Bits** 43210 Description 00000: Channel 0 00001: Channel 1 .... 01010: Channel 10 .... 01101: Channel 13 Others: Reserved 11111: Channel Disabled (default)

7.10.4.5 Calibration Data Control Register (KDCTL)

This register both controls the operation and indicates the status of the Calibration channel.

Address Offset: 05h

B it	R/W	Default	Description
7	R/W	0b	**Automatic Hardware Calibration Enable(AHCE)** 0: Disable automatic hardware calibration, and the un-calibrated data(14bits signed) is stored in VCHiDATx (default). 1: Enable automatic hardware calibration, and the calibrated data(10bits unsigned) is stored in VCHiDATx .
6	R/WC	0b	**Reserved**
5	R/WC	0b	**High-Scaler Calibration Data Valid (HCDATVAL)** The data may be read when this bit is set 1. This bit is cleared when the ADC module is disabled (ADCEN in ADCCFG register is cleared) or by writing 1 to it. If gain error calibration is selected, the valid data is for Gain Error Calibration; otherwise, it is for Offset Calibration. 0: No new valid data in volt Calibration data register (default). 1: End of volt Calibration – new data is available in data buffer.
4	R/WC	0b	**Gain_Error Calibration Data Valid (GCDATVAL)** The data may be read when this bit is set 1. This bit is cleared when the ADC module is disabled (ADCEN in ADCCFG register is cleared) or by writing 1 to it. When this bit is set, the valid data is for Gain Error Calibration. 0: No new valid data in High-Scaler Calibration data register (default). 1: End of High-scaler Calibration – new data is available in data buffer.
3	R/W	0b	**Reserved**
2	R/W	0b	**Reserved**
1	R/W	0b	**Volt High Scale Calibration Enable (VHSCKE)** When GECKE is cleared to 0, set this bit to 1 to enable the Volt High Scale (3volts) Calibration operation for volt ADC channel (AHCE bit must be cleared.) To initialize one ADC calibration operation, calibration data will be stored on Voltage High Scale Calibration Data Buffer when ADC calibration data has been done (DATVAL=1), and this bit will be cleared to zero automatically. 0: Disabled calibration operation(default) 1: Enabled calibration operation only when GECKE is cleared to 0.
0	R/W	0b	**Gain_Error Calibration Enable (GECKE)** Enables the Gain_Error Calibration operation for volt ADC channel (AHCE bit must be clear). Set this bit to 1 to initialize one ADC gain_error calibration operation, and calibration data will be stored on Voltage Gain_error Calibration Data Buffer when ADC calibration data has been done(GCDATVAL=1), and this bit will be cleared to zero automatically. 0: Disabled calibration operation(default) 1: Enabled gain error calibration operation

7.10.4.6 Voltage Channel 1 Control Register (VCH1CTL)

This register both controls the operation and indicates the status of Voltage Channel 1.

Address Offset: 06h

Bit	R/W	Default	Description
7	R/WC	0b	**Data Valid (DATVAL)** The data may be read immediately when this bit is set 1. This bit is cleared when the ADC module is disabled or by writing 1 to it. 0: No valid data in VCH1DATx register (default) 1: End of conversion – New data is available.
6	R/W	0b	**Reserved**
5	R/W	0b	**Interrupt from Data Valid Enable (INTDVEN)** Enabled to the ADC Interrupt for Data valid event of Volt channel 1. 0: Disabled (default) 1: Enabled – ADC Interrupt from local DATVAL
4-0	R/W	11111b	**Selected Input (SELIN)** Indicates which Volt channel input is selected for measurement. Channel selected must be done before beginning to measure channel. **Bits** 4 3 2 1 0 Description 0 0 0 0 0: Channel 0 0 0 0 0 1: Channel 1 .... 0 1 0 1 0: Channel 10 .... 0 1 1 0 1: Channel 13 Others: Reserved 1 1 1 1 1: Channel Disabled (default)

7.10.4.7 Volt Channel 1 Data Buffer LSB (VCH1DATL)

This register (buffer) holds the data(LSB 8bits) measured by the Volt Channel 1.

Address Offset: 07h

Bit	R/W	Default	Description
7-0	R	-	**Volt Channel Data (VCHDAT7-0)** Volt channel data is measured by the volt channel 1. The data may be available only when DATVAL is set. DATVAL must be cleared after read data.

7.10.4.8 Volt Channel 1 Data Buffer MSB (VCH1DATM)

This register (buffer) holds the data(MSB 6bits) measured by the Volt Channel 1.

Address Offset: 08h

Bit	R/W	Default	Description
7-6		-	**Reserved**
5-0	R	-	**Volt Channel Data (VCHDAT13-8)** Volt channel data is measured by the volt channel 1. The data may be available only when DATVAL is set. DATVAL must be cleared after read data.

7.10.4.9 Voltage Channel 2 Control Register (VCH2CTL)

This register both controls the operation and indicates the status of Voltage Channel 2.

Address Offset: 09h

Bit	R/W	Default	Description
7	R/WC	0b	**Data Valid (DATVAL)** The same as Volt channel 1.
6	R/W	0b	**Reserved** The same as Volt channel 1.
5	R/W	0b	**Interrupt from Data Valid Enable (INTDVEN)** The same as Volt channel 1.
4-0	R/W	11111b	**Selected Input (SELIN)** The same as Volt channel 1.

7.10.4.10 Volt Channel 2 Data Buffer LSB (VCH2DATL)

This register (buffer) holds the data(LSB 8bits) measured by the Volt Channel 2.

Address Offset: 0Ah

Bit	R/W	Default	Description
7-0	R	-	**Volt Channel Data (VCHDAT7-0**) Volt channel data is measured by the volt channel 2. The data may be available only when DATVAL is set. DATVAL must be cleared after read data.

7.10.4.11 Volt Channel 2 Data Buffer MSB (VCH2DATM)

This register (buffer) holds the data(MSB 6bits) measured by the Volt Channel 2.

Address Offset: 0Bh

Bit	R/W	Default	Description
7-6		-	**Reserved**
5-0	R	-	**Volt Channel Data (VCHDAT13-8)** Volt channel data is measured by the volt channel 2. The data may be available only when DATVAL is set. DATVAL must be cleared after read data.

7.10.4.12 Voltage Channel 3 Control Register (VCHN3CTL)

This register both controls the operation and indicates the status of Voltage Channel 3.

Address Offset: 0Ch

Bit	R/W	Default	Description
7	R/WC	0b	**Data Valid (DATVAL)** The same as Volt channel 1.
6	R/W	0b	**Reserved** The same as Volt channel 1.
5	R/W	0b	**Interrupt from Data Valid Enable (INTDVEN)** The same as Volt channel 1.
4-0	R/W	11111b	**Selected Input (SELIN)** The same as Volt channel 1.

7.10.4.13 Volt Channel 3 Data Buffer LSB (VCH3DATL)

This register (buffer) holds the data(LSB 8bits) measured by the Volt Channel 3.

Address Offset: 0Dh

Bit	R/W	Default	Description
7-0	R	-	**Volt Channel Data (VCHDAT7-0)** Volt channel data is measured by the volt channel 3. The data may be available only when DATVAL is set. DATVAL must be cleared after read data.

7.10.4.14 Volt Channel 3 Data Buffer MSB (VCH3DATM)

This register (buffer) holds the data(MSB 6bits) measured by the Volt Channel 3.

Address Offset: 0Eh

Bit	R/W	Default	Description
7-6		-	**Reserved**
5-0	R	-	**Volt Channel Data (VCHDAT13-8)** Volt channel data is measured by the volt channel 3. The data may be available only when DATVAL is set. DATVAL must be cleared after read data.

7.10.4.15 Volt High Scale Calibration Data Buffer LSB (VHSCDBL)

This register (buffer) holds the calibration data(LSB 8bits) measured by the internal voltage channel.

Address Offset: 14h

Bit	R/W	Default	Description
7-0	R	-	**Volt Calibration Data (VCKD7-0)** Volt calibration data is measured by the internal voltage channel. The data may be available only when DATVAL is set. DATVAL must be cleared after read data.

7.10.4.16 Volt High Scale Calibration Data Buffer MSB (VHSCDBM)

This register (buffer) holds the calibration data(MSB 4bits) measured by the internal voltage channel.

Address Offset: 15h

Bit	R/W	Default	Description
7-6	-	00h	**Reserved**
5-0	R	-	**Volt Calibration Data (VCKD13-8)** Volt calibration data is measured by the internal voltage channel. The data may be available only when DATVAL is set. DATVAL must be cleared after read data.

7.10.4.17 Voltage Channel 0 Data Buffer LSB (VCH0DATL)

This register (buffer) holds the data (LSB 7-0) measured by the Voltage Channel 0.

Address Offset: 18h

Bit	R/W	Default	Description
7-0	R	-	**Voltage Channel Data (VCHDAT7-0)** Volt channel data is measured by the volt channel 0. The data may be available only when DATVAL is set. DATVAL must be cleared after read data.

7.10.4.18 Voltage Channel 0 Data Buffer MSB (VCH0DATM)

This register (buffer) holds the data (MSB 6 bits) measured by the Temperature Channel.

Address Offset: 19h

Bit	R/W	Default	Description
7-6	-	00h	**Reserved**
5-0	R	-	**Voltage Channel Data (VCHDAT13-8)** Volt channel data is measured by the volt channel 0. The data may be available only when DATVAL is set. DATVAL must be cleared after read data.

7.10.4.19 Volt High Scale Gain-Error Calibration Data Buffer LSB (VHSGCDBL)

This register (buffer) holds the gain-error calibration data(LSB 8bits) measured by the internal voltage channel.

Address Offset: 1Ch

Bit	R/W	Default	Description
7-0	R	-	**Volt Gain-Error Data (VGED7-0)** Volt gain-error data is measured by the internal voltage channel. The data may be read only when the DATVAL is set.

7.10.4.20 Volt High Scale Gain-Error Calibration Data Buffer MSB (VHSGCDBM)

This register (buffer) holds the gain-error calibration data(MSB 6bits) measured by the internal voltage channel.

Address Offset: 1Dh

Bit	R/W	Default	Description
7-4	-	00h	**Reserved**
5-0	R	-	**Volt Gain-Error Data (VGED13-8)** Volt gain-error data is measured by the internal voltage channel. The data may be read only when the DATVAL is set.

7.10.5 ADC Programming Guide

Table 7-19. Detail Step of ADC Channel Conversion

Action	Step	Description
Determine Offset and Gain_Error during initialization	1	Set AINITB@ADCSTS = 1 then clear it (only once after VSTBY power on) Case1: AHCE = 0 (hardware calibration disable, use software calibration) Clear AHCE@KDCTL reg goto step 2 Case2: AHCE = 1 (hardware calibration enable) Set AHCE@KDCTL reg , DFILEN =1 goto step 9 (skip step 3 to 8)
	2	Enable digital filter by setting DFILEN@ADCCFG = 1
	3	Set high scale offset calibration bit by setting VHSCKE@KDCTL = 1
	4	Start ADC conversion by setting ADCEN@ADCCFG = 1
	5	Waiting for HCDATVAL@KDCTL = 1 If true, get Offset Data **O** by reading VHSCDBM and VHSCDBL **O**[13:0] = {VHSCDBM[5:0], VHSCDBL[7:0]}
	6	Start Gain_Error calibration by setting GECKE@KDCTL = 1
	7	Waiting for GCDATVAL@KDCTL = 1 If true, get Gain_Error Data **G** by reading VHSGCDBM and VHSGCDBL **G**[13:0] = {VHSGCDBM[5:0], VHSGCDBL[7:0]}
	8	Disable ADC to reduce power consumption by setting ADCEN@ADCCFG = 0
ADC channel conversion	9	Enable VCHnCTL for measuring desired channels; n = 0,1, 2, or 3
	10	For example; To measure ADC0 voltage on voltage buffer 1 Set SELIN@VCH1CTL = 0
	11	Start ADC channel conversion by setting ADCEN@ADCCFG =1
	12	Waiting for DATVAL@VCH1CTL = 1 CASE1 : AHCE =0 (disable) If true, get ADC0 output data **R** by reading VCH1DATM and VCH1DATAL **R**[13:0] = {VCH1DTM[5:0], VCH1DATL[7:0]} CASE1 : AHCE =1 (enable) If true, get ADC0 output data **D** by reading VCH1DATM and VCH1DATAL **D**[9:0] = {VCH1DTM[1:0], VCH1DATL[7:0]}
	13	Disable ADC to reduce power consumption by setting ADCEN@ADCCFG = 0
	14	Follow to make a software calibration then go to step 8 next time.

Figure 7-20. ADC Software Calibration Flow

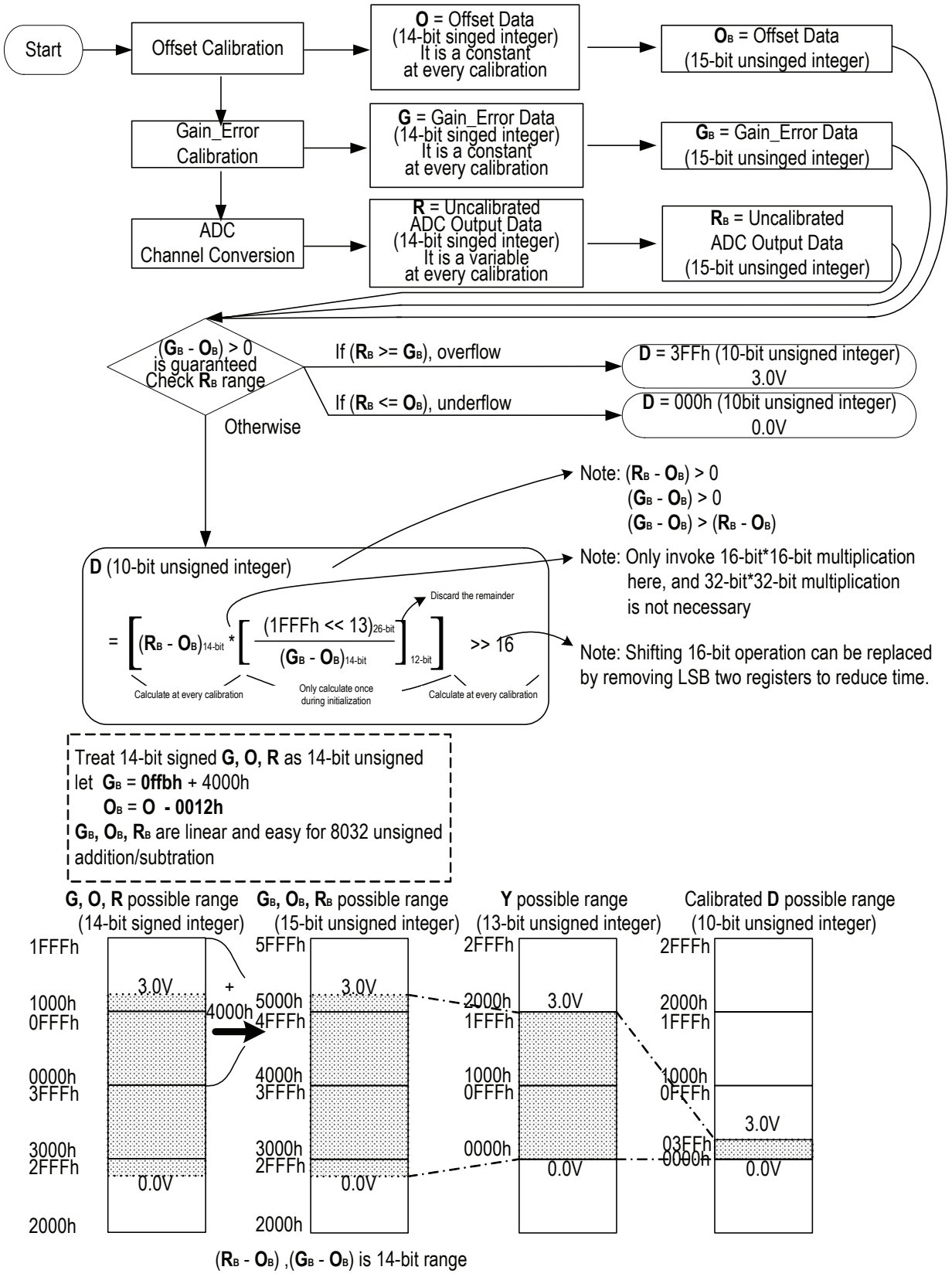

Figure 7-21. ADC Software Calibration Flow in a Special Case

Another quick way in a special case:

If **D** is used to be compared with a threshold value, this threshold can be calculated first to be mapped into the data space of G_B, O_B, R_B during initialization, and the multiplication and division operation invoked to calibrate R_B can be omitted. There are only one multiplication and one division to calculate R_{BL} during initialization.

Threshold Low Boundary $$R_{BL}{}_{15\text{-bit}} = \left[\frac{(G_B - O_B)_{14\text{-bit}} * (D << 3)_{13\text{-bit}}}{1FFFh_{\ 13\text{-bit}}} \right]_{14\text{-bit}} + O_{B}{}_{15\text{-bit}}$$

Threshold High Boundary $$R_{BH}{}_{15\text{-bit}} = R_{BL} + (2 << 3) - 1 = R_{BL} + 7$$

Then uncalibrated R_B which satisfies $R_{BL} <= R_B <= R_{BL}$ should be mapped into calibrated **D**
That is, normally 8 possible R_B values will be mapped into calibrated **D**

Example:

G_B = 5020h
O_B = 3010h
Threshold voltage = 2.0V, Target **D** = 3FFh * 2.0 / 3.0 = 2AAh
Then $$R_{BL} = \left[\frac{(5020h - 3020h) * (2AAh << 3)}{1FFFh} \right] + 3010h = 456Bh$$

$$R_{BH} = R_{BL} + 7$$

Final

Calibrated ADC Output < 2.0V	if R_B < 456Bh
Calibrated ADC Output <= 2.0V	if R_B <= (456Bh + 7)
Calibrated ADC Output > 2.0V	if R_B > (456Bh + 7)
Calibrated ADC Output >= 2.0V	if R_B >= 456Bh

7.11 PWM and SmartAuto Fan Control (PWM)

7.11.1 Overview

The PWM module generates eight 8-bit PWM outputs; each PWM output may have a different duty cycle. The fan speed may be controlled by software or automatically controlled by the SmartAuto Fan control module. In SmartAuto Fan mode, the SmartAuto Fan control logic monitors the temperature and automatically adjusts the PWM output for driving the fan speed.

7.11.2 Features

- Supports eight PWM outputs
- Supports two fan tachometer inputs
- Supports programmable automatic SmartAuto Fan control based on the temperature
- Supports exchangeable PWM output for SmartAuto Fan control
- Supports fan temperature limit configuration
- Supports Interrupt for Temperature Limit Exceeded

7.11.3 Functional Description

7.11.3.1 General Description

Figure 7-22. PWM & SmartAuto Fan Block

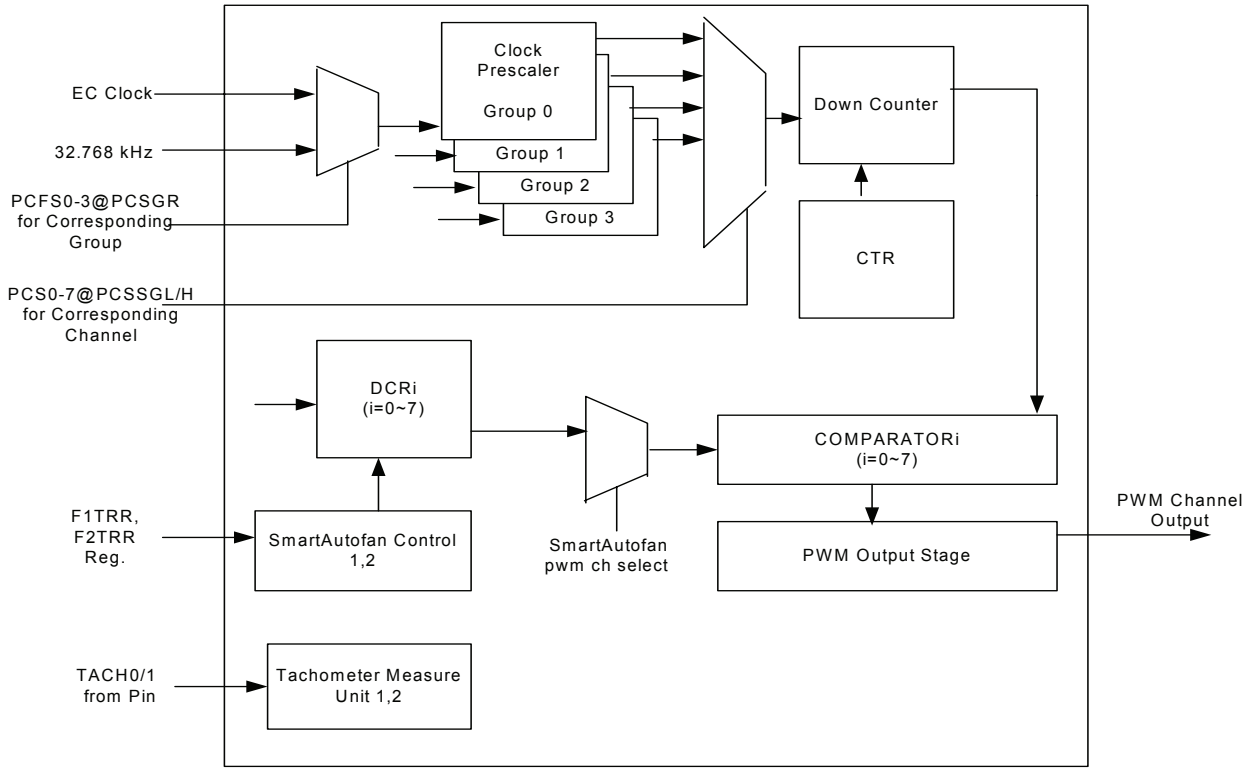

Figure 7-23. PWM Clock Tree

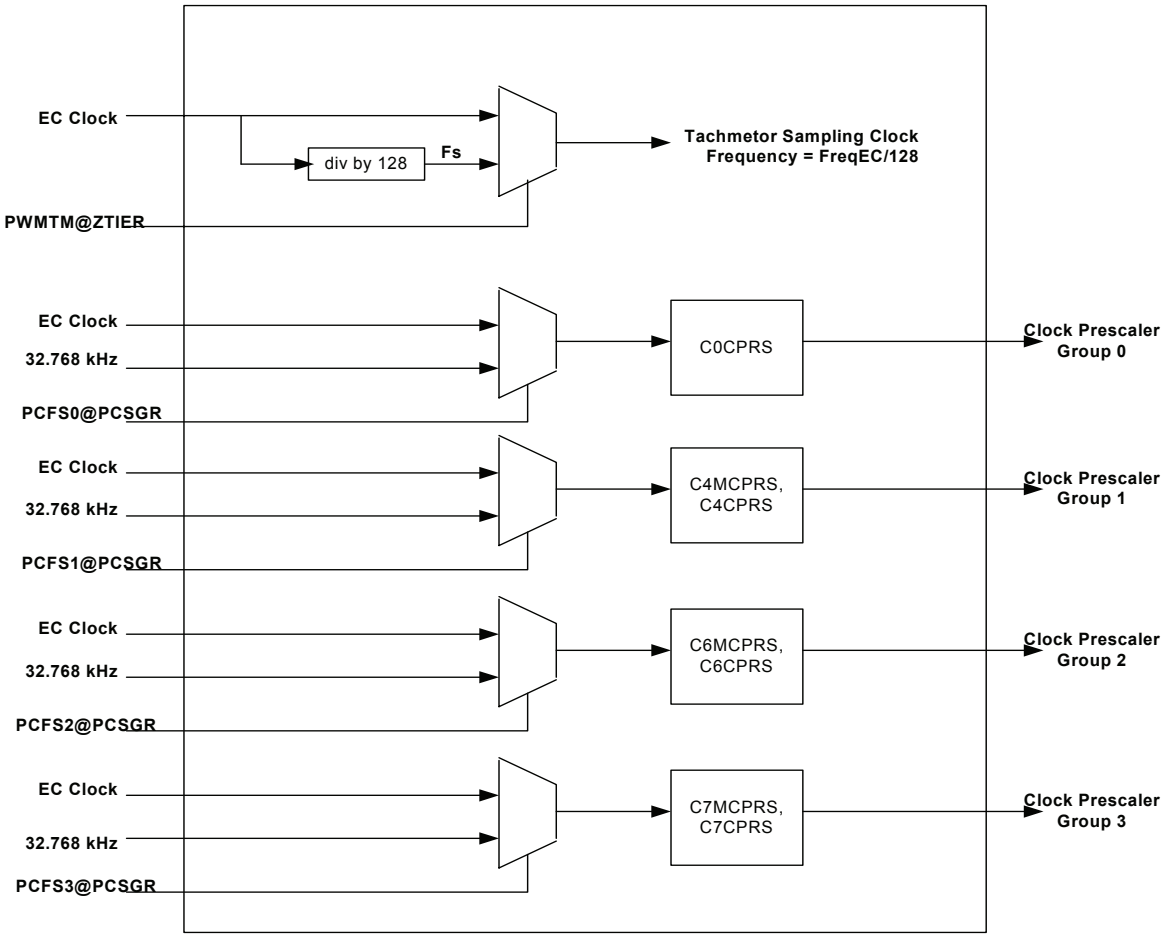

The PWM uses the 32.768 kHz Clock or EC Clock as a reference for its PWM output. The prescaler divider values in CiCRPS register which divides the PWM input clock into its working clock respectively. Each channel can select their prescaler divider by {PCSSGH,PCSSGL} register. The prescaler divider C0CRPS register has 8-bit counter value; and the {CiMCRPS, CiCRPS}(i=4,6,7) has 16-bit counter value. The PWM provides eight 8-bit PWM outputs, which are PWM0 to PWM7. Each PWM output is controlled by its Duty Cycle registers (DCRi, i =0 to 7). All PWM output is controlled by a Cycle Time register (CTR).

When PWM working clock is enabled, the PWM cycle output is high when the value in the DCRi register is larger than the value in CTR down-counter. When the value of DCRi register is not larger than the value in CTR down-counter, the PWMi cycle output is on LOW and PWMi cycle output polarity can be inversed by INVPi register.

When the value in CTR counter down-counter reaches 0, the value in CTR counter will be reloaded then start down-counter until the PWM working clock is disabled.

Cycle Time and Duty Cycle

The PWM module supports duty cycles ranging from 0% to 100%.

The PWMi output signal cycle time is:

$$n(CiCPRS + 1) \times (CTR + 1) \times T_{clk}$$

Where:

- T_{clk} is the period of PWM input clock = (1 / 32.768 KHz) or (1 / FreqEC), which is selected by PCFS3-0 in PCSGR regiser. (FreqEC is listed in Table 10-1 on page 299)
- The PWMi output signal duty cycle (in %, when INVPi is 0) is:

  (DCRi) / (CTR + 1) x 100.

In the following cases, the PWMi output is hold at a state(low or high):
•PWMi output is still low when the content of DCRi is larger than the CTR value.
•PWMi output is still high when the content of DCRi is equal to the CTR value.
•PWMi output is still low when the content of DCRi =0 & INVPi = 0 is in PWMPOL register.

PWM Inhibit Mode
The PWM is in an inhibit mode when PCCE in ZTIER Register is 0. In this mode, the PWM input clock is disabled (stopped). The PWMi signal is 0 when INVPi bit is 0; it is 1 when INVPi bit is 1. It is recommended the PRSC and CTR registers should be updated in a PWM inhibit mode.

7.11.3.2 CR256 Description

Figure 7-24. CR256 PWM Block Diagram

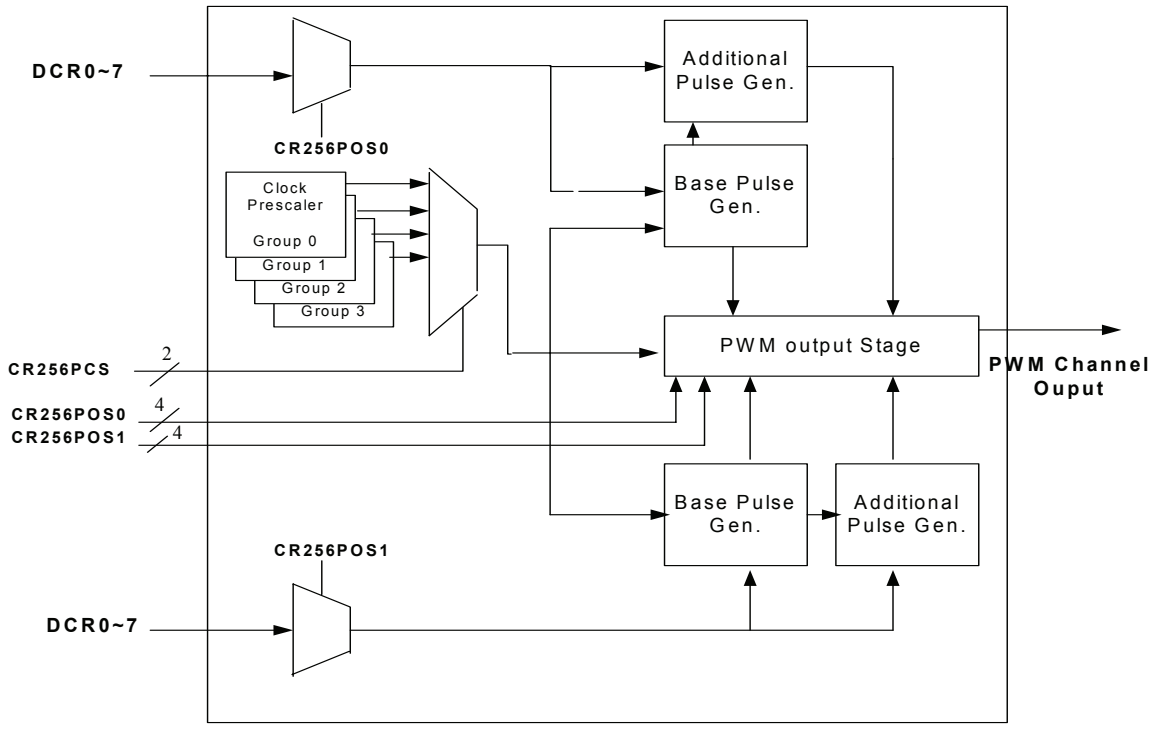

CR256 Operation Principle

The CR256 block is composed of clock pre-scaler, pulse generators, and output stage. It is shown in Figure 7-24 on page 223. Each pulse generator is divided into the base pulse generator and additional pulse generator. There are two pulse generators for two channels of CR256.

One PWM cycle of CR256 is composed of 16 base pulse cycles, which are produced by the base pulse generator and additional pulse generator. One base pulse cycle has 16 resolutions, and one resolution equals to one clock period of clock prescaler output. So, one PWM cycle of CR256 has 256(16*16) resolutions.
One base pulse cycle is composed of 16 clocks of prescaler output. It is shown in Table 7-20 on page 224.

7.11.3.3 How to Decide CR256 Duty Time

The duty time of CR256 is determined by the value of DCRi, which is also used by the traditional PWM channel. When DCRi is assigned to CR256 PWM, the values of bits 7-4 of DCRi are all represented by H. The values of bits 3-0 are all represented by L. The duty time of one PWM cycle is calculated by the following formula:
duty cycle = (16*H + L) / 256
The minimum of duty cycle of CR256 is 0 as H = 0, L =0, and maximum is 255 as H=15, L=15.

7.11.3.4 How to Program CR256 PWM

For complete resolution 256 PWM output, the programmer can set CR256POS0, 1 (CR256 PWM is disabled in default.).
CR256 PWM channel0 is active when CR256POS0 is set to 0~7, and CR256 PWM channel1 is active when CR256POS1 is set to 0~7. DCRi is assigned to CR256 channel0 when CR256POS0 =i, DCRi is assigned to CR256 channel1 when CR256POS1 =i. CR256 uses the upper 4 bits of DCRi to generate the base pulse cycle whose duty cycle range is from 0/16 to 15/16, and uses the lower 4 bits of DCRi to generate additional pulses that are added into the base pulse cycle. The additional pulse is added into the leading portion of the base pulse cycle shown in Table 7-21 on page 225, and the symbol "V" denotes that the base pulse cycle needs to be added by one additional pulse. For example, if DCRi of CR256 is 01h, the 15th base pulse cycle is added by one additional pulse, and other base pulse cycles are zero and have no any additional pulse added. So, the duty cycle of CR256 PWM output is 1/256. Whether one base pulse cycle is added by one additional pulse or not is showed in Figure 7-25 on page 225 and CR256 PWM programming guide is showed in Figure 7-27 on page 244.

Table 7-20. CR256 Waveform

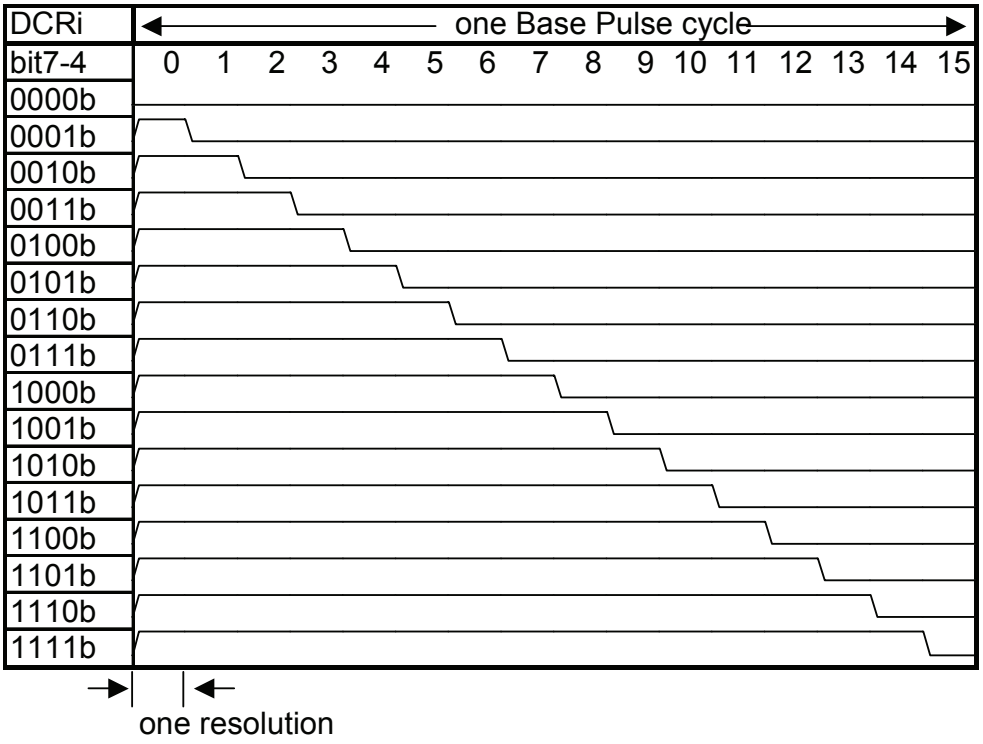

Table 7-21. CR256 Added Additional Pulse Position

DCRi	Additional Pulse Position															
	base pulse cycle number															
bit3-0	0	1	2	3	4	5	6	7	8	9	10	11	12	13	14	15
0000b																
0001b																V
0010b								V								V
0011b								V				V				V
0100b				V				V				V				V
0101b				V				V				V		V		V
0110b				V		V		V				V		V		V
0111b				V		V		V		V		V		V		V
1000b		V		V		V		V		V		V		V		V
1001b		V		V		V		V		V		V		V	V	V
1010b		V		V		V	V	V		V		V		V	V	V
1011b		V		V		V	V	V		V	V	V		V	V	V
1100b		V	V	V		V	V	V		V	V	V		V	V	V
1101b		V	V	V		V	V	V		V	V	V	V	V	V	V
1110b		V	V	V	V	V	V	V		V	V	V	V	V	V	V
1111b		V	V	V	V	V	V	V	V	V	V	V	V	V	V	V

one base pulse cycle

Figure 7-25. CR256 Base Pulse vs. Additional Pulse

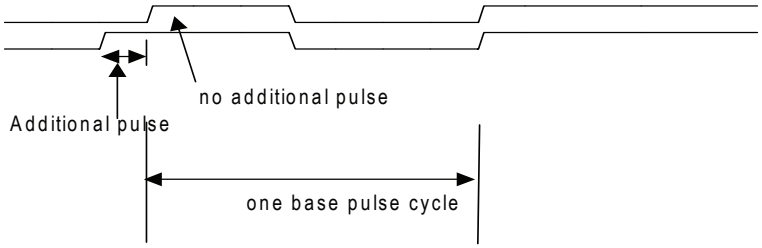

7.11.3.5 SmartAuto Fan Control Mode

Fan PWM Channel Select

The EC chip provides 2 types of fan control operation mode using PMW output. A mode select can be set in FANCNF in the Fani configuration register (FANiCNF).

When in a SmartAuto Fan mode, the fan will be assigned for a zone and its PWM duty cycle will be automatically adjusted according to the temperature of that zone.

Its PWM duty cycle register can be read/written by software to control the PWM duty cycle output in a manual fan mode.

In a fan control mode, it is necessary to select which PWM channel outputs for driving Fan. The FPWMCS in FANiCNF register is set from 000b~111b to select CH0~7 PWM output as driving source for FANi respectively and the value of FiTLIMITR must be larger than the value of ZHYSVof FANi in ZHTSR register.

(FiATLIMITR > FiTC3 > FiTC2 > FiTC1 > FiTLIMITR)

SmartAuto Fan Control Operation

When operating in SmartAuto Fan Control Mode, the hardware controls the fans based on monitoring the temperature and speed. The following initialization needs to be done:

1. Set the minimum temperature that will turn on/off the fans in FANi Temperature Limit register(FiTLIMITR).
2. Set the hysteresis value for the minimum temperature. The fan keeps in the on state until the temperature is below a certain amount which is set in FiTLIMITR register. The hysteresis value can be set in ZHYSR register.
3. In SmartAuto Fan mode 0, the duty cycle for the minimum fan speed needs to be set in FiMPDCR register. The actual temperature increase/decrease decides a linear function based on the fan speed range in the AFiSRR register.
4. In SmartAuto Fan mode 1, the duty cycle for the minimum fan speed needs to be set in FiMPDCR register. The actual temperature increase/decrease decides PWM output for fan based on the temperature criterion, PWM duty cycle criterion in the FiTCi register and FiPDCi regsiter.
5. Set the absolute temperature for FANi in the FiATLIMITR register. If the actual temperature is equal to or exceeds the absolute temperature value set in FiATLIMITR, FANi will be set to the entire on state.

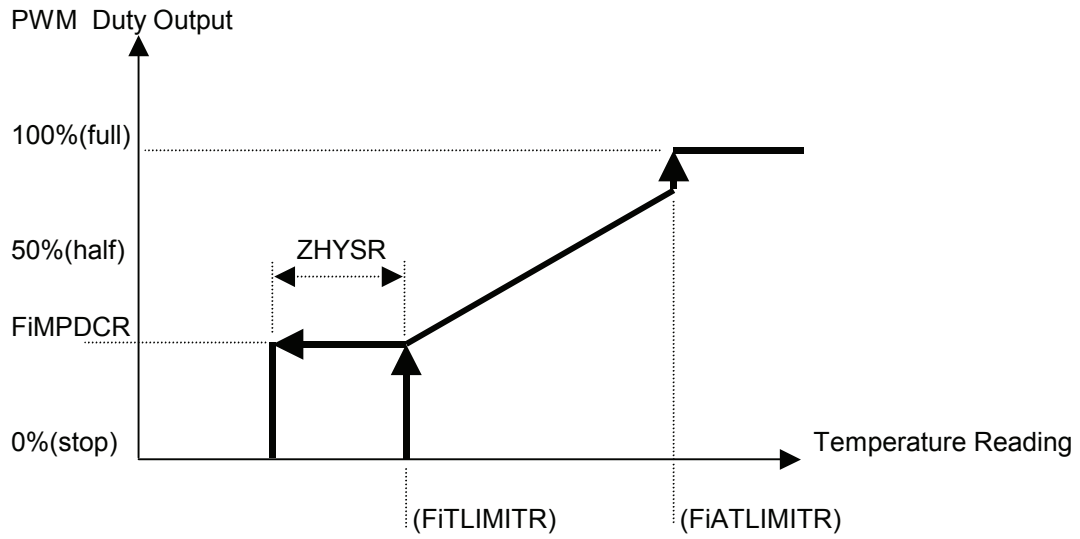

Figure 7-26. SmartAuto Mode 1 Fan PWM output vs. Temperature Reading

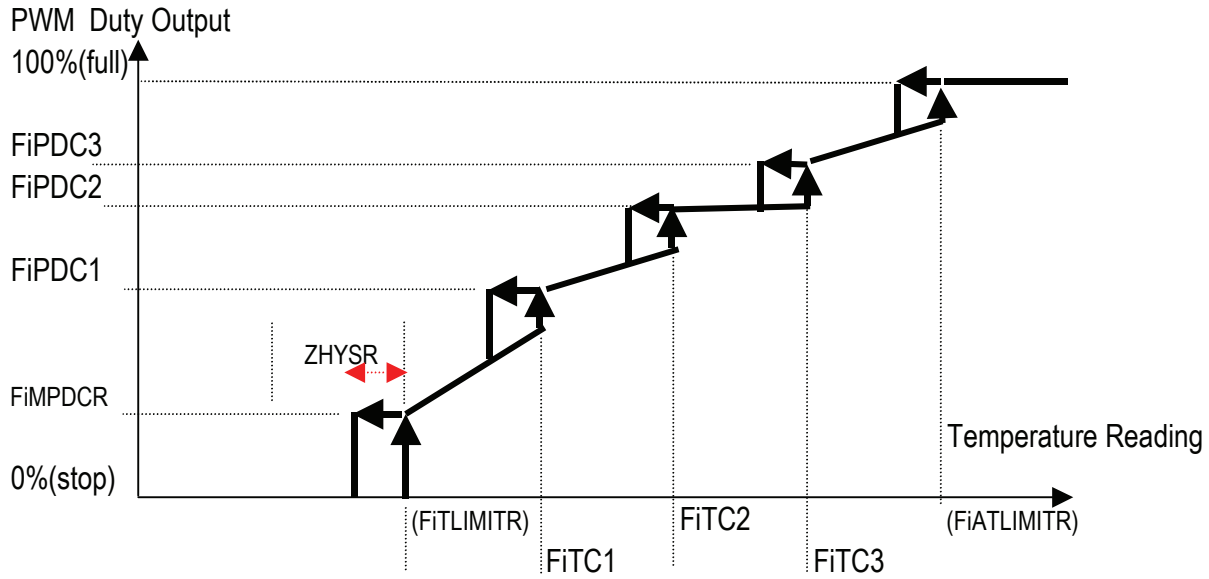

The following is SmartAuto Fan linear calculation formula:

Linear Autofan output duty cycle = P_Fipdc + [(T - T_limit) / Trange * P_Fipdcr]

P_Fipdcr denotes the fan minimum PWM duty cylce of region,
e.g minimum region=F1MPDCR , 1st region = fipdc1, ...
T denotes the input temperature
T_limit denotes the fan temperature criterion, set by F1TLIMITR, F1TC1~3, . ..
Trange denotes the speed range set by AFMISRR, AFMASRR
[ ] denotes to take the integer result

7.11.3.6 Manual Fan Control Mode

In manual mode, the software may monitor either the fan Tachometer Reading Registers or Temperature Reading Register to control the fan speed by programming the duty cycle of the driving PWM (FiMPDCR) register.

The contents of the Tachometer Reading Register is still updated according to the sampling counter that samples the tachometer input (TACH0 pin for FAN1 of the local sensor zone and TACH1 pin for FAN2 of the remote sensor zone). The sampling rate (fs) is FreqEC / 128. (FreqEC is listed in Table 10-1 on page 299)

Fan Speed (R.P.M.) = 60 / (1/fs sec * {FnTMRR, FnTLRR} * P)
n denotes 1 or 2
P denotes the numbers of square pulses per revolution.
And {FnTMRR, FnTLRR} = 0000h denotes Fan Speed is zero.

7.11.4 EC Interface Registers

These registers are mapped in the address space of EC. The registers are listed below and the base address is 1800h.

Table 7-22. EC View Register Map, PWM

7	0	Offset
Channel 0 Clock Prescaler Register (C0CPRS)		00h
Cycle Time (CTR)		01h
PWM Duty Cycle (DCR0-7)		02h-09h
PWM Polarity (PWMPOL)		0Ah
Prescaler Clock Frequency Select Register (PCFSR)		0Bh
Prescaler Clock Source Select Group Low (PCSSGL)		0Ch
Prescaler Clock Source Select Group High (PCSSGH)		0Dh
CR256 Prescaler Clock Source Select Group (CR256PCSSG)		0Eh
Prescaler Clock Source Gating Register (PCSGR)		0Fh
Fan 1 Configuration (FAN1CNF)		10h
Fan 2 Configuration (FAN2CNF)		11h
SmartAuto Fan Minimum-region Speed Range Register (AFMISRR)		12h
SmartAuto Fan Maximum-region Speed Range Register (AFMASRR)		13h
Min/Off PWM Limit (MOPL)		14h
Fan 1 Minimum PWM Duty (F1MPDCR)		15h
Fan 2 Minimum PWM Duty (F2MPDCR)		16h
Fan 1 Temperature Limit (F1TLIMITR)		17h
Fan 2 Temperature Limit (F2TLIMITR)		18h
Fan 1 Absolute Temperature Limit (F1ATLIMITR)		19h
Fan 2 Absolute Temperature Limit (F2ATLIMITR)		1Ah
Zone Hysteresis (ZHYSR)		1Bh
Fan 1 Temperature Record (F1TRR)		1Ch
Fan 2 Temperature Record (F2TRR)		1Dh
Fan 1 Tachometer LSB Reading (F1TLRR)		1Eh
Fan 1 Tachometer MSB Reading (F1TMRR)		1Fh
Fan 2 Tachometer LSB Reading (F2TLRR)		20h
Fan 2 Tachometer MSB Reading (F2TMRR)		21h
Zone Interrupt Status Control (ZINTSCR)		22h
Zone Temperature Interrupt Enable (ZTIER)		23h
Channel 4 Clock Prescaler Register (C4CPRS)		27h
Channel 4 Clock Prescaler MSB Register (C4MCPRS)		28h
Channel 6 Clock Prescaler Register (C6CPRS)		2Bh
Channel 6 Clock Prescaler MSB Register (C6MCPRS)		2Ch
Channel 7 Clock Prescaler Register (C7CPRS)		2Dh
Channel 7 Clock Prescaler MSB Register (C7MCPRS)		2Eh
Fan 1 Temperature Criterion(F1TC1-3)		30h-32h
Fan 2 Temperature Criterion(F2TC1-3)		34h-36h
Fan 1 PWM Duty Criterion (F1PDC1-3)		38h-3Ah
Fan 2 PWM Duty Criterion (F2PDC1-3)		3Ch-3Eh

For a summary of the abbreviations used for register types, see “Register Abbreviations and Access Rules”

7.11.4.1 Channel 0 Clock Prescaler Register (C0CPRS)

This register controls the cycle time and the minimal pulse width of channel 0~3.

Address Offset: 00h

Bit	R/W	Default	Description
7-0	R/W	00b	**Prescaler Divider Value (PSDV)** PWM input clock is divided by the number of (C0CPRS+ 1). For example, the value of 01h results in a divide by 2. The value of FFh results in a divide by 256. The contents of this register may be changed only when the PWM module is in the PWM inhibit mode.

7.11.4.2 Cycle Time Register (CTR)

This register controls the cycle time and duty cycle steps.

Address Offset: 01h

Bit	R/W	Default	Description
7-0	R/W	FFh	**Cycle Time Value (CTV)** The Prescaler output clock is divided by the number of (CTR + 1). For example, the value of 00h results in a divide by 1. The value of FFh results in a divide by 256. The contents of this register may be changed only when the PWM module is in the PWM inhibit mode.

7.11.4.3 PWM Duty Cycle Register 0 to 7(DCRi)

This register (DCRi; I=0 to 7) controls the duty cycle of PWMi output signal.

Address Offset: 02h(ch0), 03h(ch1), 04h(ch2), 05h(ch3), 06h(ch4), 07h(ch5), 08h(ch6), 09h(ch7);

Bit	R/W	Default	Description
7-0	R/W	00h	**Duty Cycle Value (DCV)** DCRi register decides the number of clocks for which PWMi is high when INVPi bit is 0 in PWMPOL register. The PWMi Duty Cycle output = (DCRi)/(CTR+1) If the DCRi value > CTR value, PWMi signal is still low. If DCRi value = CTR value, PWMi signal is still high. When Inverse PWMi bit is 1, the value of PWMi is inversed.

7.11.4.4 PWM Polarity Register (PWMPOL)

This register controls the polarity of PWM0 to PWM7.

Address Offset: 0Ah

Bit	R/W	Default	Description
7-0	R/W	00h	**Inverse PWM Outputs (INVP7-0)** Bit 7 to 0 control the polarity of PWM7 to PWM0 respectively. 0: Non-inverting. 1: Inverting.

7.11.4.5 Prescaler Clock Frequency Select Register (PCFSR)

This register Bit3~0 is used to select prescaler clock frequency for four channel groups3~0. Each of them includes 1 set prescaler registers. See the following table.

Channel Group	Prescaler Channels
0	C0CPRS
1	C4MCPRS,C4CPRS
2	C6MCPRS,C6CPRS
3	C7MCPRS,C7CPRS

This register Bit7~4 is used to select one PWM output from eight channels for CR256 PWM channel 1, and the DCRi of the selected channels is used as DCR of CR256 PWM channel 1.

Address Offset: 0Bh

Bit	R/W	Default	Description
7-4	R/W	1000b	**CR256 PWM Output Select 1 (CR256POS1)** The bits select CR256 PWM output channel 0000: Select PWM channel 0 as output of CR256 PWM channel 1 0001: Select PWM channel 1 as output of CR256 PWM channel 1 0010: Select PWM channel 2 as output of CR256 PWM channel 1 0011: Select PWM channel 3 as output of CR256 PWM channel 1 0100: Select PWM channel 4 as output of CR256 PWM channel 1 0101: Select PWM channel 5 as output of CR256 PWM channel 1 0110: Select PWM channel 6 as output of CR256 PWM channel 1 0111: Select PWM channel 7 as output of CR256 PWM channel 1 1000: Disable CR256 channel 1 output.
3-0	R/W	0h	**Prescaler Clock Frequency Select (PCFS3-0)** Bit 3 to 0 select prescaler clock frequency for channel group 3 to 0 respectively. 0: select 32.768 kHz 1: select EC clock frequency (listed in Table 10-1 on page 299)

7.11.4.6 Prescaler Clock Source Select Group Low (PCSSGL)

This register is used to select prescaler clock source for four channels. Each channel uses 2 bits to select one from four prescaler clock sources.

Address Offset: 0Ch

Bit	R/W	Default	Description
7-6	R/W	0h	**Prescaler Clock Select 3 (PCS3)** The bits select prescaler clock for channel 3. The bits 7-6 are the same as bit 1-0.
5-4	R/W	0h	**Prescaler Clock Select 2 (PCS2)** The bits select prescaler clock for channel 2. The bits 5-4 are the same as bit 1-0.
3-2	R/W	0h	**Prescaler Clock Select 1 (PCS1)** The bits select prescaler clock for channel 1. The bits 3-2 are the same as bit 1-0.
1-0	R/W	0h	**Prescaler Clock Select 0 (PCS0)** The bits select prescaler clock for channel 0. 00: select prescaler clock divided by C0CPRS 01: select prescaler clock divided by {C4MCPRS,C4CPRS} 10: select prescaler clock divided by {C6MCPRS,C6CPRS} 11: select prescaler clock divided by {C7MCPRS,C7CPRS}

7.11.4.7 Prescaler Clock Source Select Group High (PCSSGH)

This register is used to select prescaler clock source for four channels. Each channel uses 2 bits to select one from four prescaler clock sources.

Address Offset: 0Dh

Bit	R/W	Default	Description
7-6	R/W	1h	**Prescaler Clock Select 7(PCS7)** The bits select prescaler clock for channel 7. The bits 7-6 are the same as bit 1-0.
5-4	R/W	1h	**Prescaler Clock Select 6(PCS6)** The bits select prescaler clock for channel 6. The bits 5-4 are the same as bit 1-0.
3-2	R/W	1h	**Prescaler Clock Select 5(PCS5)** The bits select prescaler clock for channel 5. The bits 3-2 are the same as bit 1-0.
1-0	R/W	1h	**Prescaler Clock Select 4 (PCS4)** The bits select prescaler clock for channel 4 00: select prescaler clock divided by C0CPRS 01: select prescaler clock divided by {C4MCPRS,C4CPRS} 10: select prescaler clock divided by {C6MCPRS,C6CPRS} 11: select prescaler clock divided by {C7MCPRS,C7CPRS}

7.11.4.8 CR256 Prescaler Clock Source Select Group (CR256PCSSG)

Bits 7-6 of this register are used to select prescaler clock source for CR256(Complete Resolution 256) PWM channels.

Bits 3-0 of this register are used to select one PWM output from eight channels for CR256 PWM channel 0, and the DCRi of the selected channels is used as DCR of CR256 PWM channel 0.

Address Offset: 0Eh

Bit	R/W	Default	Description
7-6	R/W	00b	**CR256 Prescaler Clock Select 7(CR256PCS)** The bits select prescaler clock for CR256 PWM channel. 00: Select prescaler clock divided by C0CPRS 01: Select prescaler clock divided by {C4MCPRS,C4CPRS} 10: Select prescaler clock divided by {C6MCPRS,C6CPRS} 11: Select prescaler clock divided by {C7MCPRS,C7CPRS}
5-4	R/W	0h	**Reserved**
3-0	R/W	1000b	**CR256 PWM Output Select 0 (CR256POS0)** The bits select CR256 PWM output to PAD channel 0000: Select PWM channel 0 as output of CR256 PWM channel 0 0001: Select PWM channel 1 as output of CR256 PWM channel 0 0010: Select PWM channel 2 as output of CR256 PWM channel 0 0011: Select PWM channel 3 as output of CR256 PWM channel 0 0100: Select PWM channel 4 as output of CR256 PWM channel 0 0101: Select PWM channel 5 as output of CR256 PWM channel 0 0110: Select PWM channel 6 as output of CR256 PWM channel 0 0111: Select PWM channel 7 as output of CR256 PWM channel 0 1000: Disable CR256 channel 0 output

7.11.4.9 Prescaler Clock Source Gating Register (PCSGR)

Address Offset: 0Fh

Bit	R/W	Default	Description
7-0	R/W	0h	**Prescaler Clock Source Gating (PCSG)** Bits 7-0 are used to gate prescaler clock source for PWM channels 7-0 respectively. 0: no gating clock source 1: gating clock source; PWM channel output is 0 when INVP bit is set to 0 respectively

7.11.4.10 Fan 1 Configuration Register (FAN1CNF)

This register controls the Fan 1 operation mode, which is associated with its temperature sensor.

Address Offset: 10h

Bit	R/W	Default	Description
7-6	R/W	00b	**Fan Configuration (FANCNF)** When the fan is in the SmartAuto Fan mode 0, it will be assigned to a zone and its PWM duty cycle will be automatically adjusted according to the temperature of that zone. When the fan is in the SmartAuto Fan mode 1, it will be assigned to a zone and its PWM duty cycle will be automatically adjusted according to the setting value on F1TCi and F1DPCi register When the fan is in the manual fan mode, its PWM duty cycle register can be read/written by software to control the PWM duty cycle output. **Bit Config.** 00 Fan on Zone SmartAuto mode 0 01 Fan on Zone SmartAuto mode 1 10 Fan manually controlled Others Reserved
5	-	0h	**Reserved**
4-2	R/W	0h	**Fan PWM Channel Select (FPWMCS)** Bits 4-2 Select PWM duty cycle output for driving Fan. In SmartAuto Fan mode, the value of the PWM duty cycle register selected for fan will be updated according to the SmartAuto Fan algorithm, so software may not write these PWM duty cycle register for fan. **Bit PWM CH for Fan** 000 PWM Channel 0 001 PWM Channel 1 010 PWM Channel 2 011 PWM Channel 3 100 PWM Channel 4 101 PWM Channel 5 110 PWM Channel 6 111 PWM Channel 7
1-0	R/W	0h	**Fan Spin Up Time (FANSUPT)** Bits 1-0 select the time for the fan to spin up. When the fan spins up after fan has stopped for more than 31ms, the PWM output is held at 100% duty cycle during time specified. **Bit Time** 00 Zero sec 01 250m sec (+- 30msec) 10 500m sec (+- 30msec) 11 1000m sec (+- 30msec)

7.11.4.11 Fan 2 Configuration Register (FAN2CNF)

This register controls the Fan 2 operation mode, which is associated with its temperature sensor.

Address Offset: 11h

Bit	R/W	Default	Description
7-6	R/W	00b	**Fan Configuration (FANCNF)** The same as the FAN1CNF register
5	-	0h	**Reserved**
4-2	R/W	0h	**Fan PWM Channel Select (FPWMCS)** The same as the FAN1CNF register
1-0	R/W	0h	**Fan Spin Up Time (FANSUPT)** The same as the FAN1CNF register

7.11.4.12 SmartAuto Fan Minimum-region Speed Range Register (AFMISRR)

This register controls the minimum region of the speed activity for Fan 1 and 2 in the SmartAuto Fan mode.

Address Offset: 12h

Bit	R/W	Default	Description
7	-	-	**Reserved**
6-4	R/W	4h	**Fan Speed Range 1 (FSR1)** In the SmartAuto Fan mode, when the temperature drops within the range of the Temperature Limit(TLIMIT register) and the Absolute Temperature Limit(ATLIMIT register in mode 0), or first region temperature (FiTC1 in mode 1),), the speed of the fan is increased linearly according to the increment range of the temperature. Bits 6-4 decide the temperature range. **Bit Temperature range (degree C)** 001h 2 degree C 010h 4 degree C 011h 8 degree C 100h 16 degree C 101h 32 degree C 110h 64 degree C others reserved
3	-	-	**Reserved**
2-0	R/W	5h	**Fan Speed Range 2 (FSR2)** In the SmartAuto Fan mode 1, when the temperature drops within the range of the first region temperature (FiTC1 in mode 1) and the second region temperature (FiTC2 in mode 1), the speed of the fan is increased linearly according to the increment range of the temperature. Bits 6-4 decide the temperature range. **Bit Temperature range (degree C)** 001h 2 degree C 010h 4 degree C 011h 8 degree C 100h 16 degree C 101h 32 degree C 110h 64 degree C others reserved

7.11.4.13 SmartAuto Fan Maximum-region Speed Range Register (AFMASRR)

This register controls the maximum region of the speed activity for Fan 1 and 2 in the SmartAuto Fan mode.

Address Offset: 13h

Bit	R/W	Default	Description
7	-	-	**Reserved**
6-4	R/W	5h	**Fan Speed Range 3 (FSR3)** In the SmartAuto Fan mode, when the temperature drops within the range of the second region temperature (FiTC2 in mode 1), and the third region temperature (FiTC3 in mode 1), the speed of the fan is increased linearly according to the increment range of the temperature. Bits 6-4 decide the temperature range. **Bit Temperature range (degree C)** 001h 2 degree C 010h 4 degree C 011h 8 degree C 100h 16 degree C 101h 32 degree C 110h 64 degree C others reserved
3	-	-	**Reserved**
2-0	R/W	0h	**Fan Speed Range 4 (FSR4)** In the SmartAuto Fan mode 1, when the temperature drops within the range of the third region temperature (FiTC3 in mode 1) and the Absolute Temperature Limit(ATLIMIT register in mode 1), the speed of the fan is increased linearly according to he increment range of the temperature. Bits 6-4 decide the temperature range. **Bit Temperature range (degree C)** 001h 2 degree C 010h 4 degree C 011h 8 degree C 100h 16 degree C 101h 32 degree C 110h 64 degree C others reserved

7.11.4.14 Min/Off PWM Limit Register (MOPL)

This register specifies whether duty cycle will be 0% or Minimun Fan Duty when the measured termperature is below the Temperature Limit register setting. Bit 7(OFF2) applies to Fan2 and Bit 6 (OFF1) applies to Fan1.

Address Offset: 14h

Bit	R/W	Default	Description
7	R/W	0b	**OFF2/Min Limit (O2MLIMIT)** 0: PWM actions at 0% duty when the temperature is not larger than LIMIT. 1: PWM actions at PWM Minimum duty when the temperature is below LIMIT.
6	R/W	0b	**OFF1/Min Limit (O1MLIMIT)** 0: PWM actions at 0% duty when the temperature is not larger than LIMIT. 1: PWM actions at PWM Minimum duty when the temperature is below LIMIT.
5-0	-	0h	**Reserved**

7.11.4.15 Fan 1 Minimum PWM Duty Cycle Register (F1MPDCR)

This register specifies the Minimun Fan Duty that PWM will output when the measured termperature reaches the Temperature LIMIT register settting.

Address Offset: 15h

Bit	R/W	Default	Description
7-0	R/W	80h	**Minimum PWM Duty Cycle Value (MPWMDCV)** The value of this register is the same as the DCRi register, which defines the number of clocks for which PWMi is high (from the full cycle of the PWMi cycle) when INVPi bit is 0 in PWMPOL register.

7.11.4.16 Fan 2 Minimum PWM Duty Cycle Register (F2MPDCR)

This register specifies the Minimun Fan Duty that PWM will output when the measured termperature reaches the Temperature LIMIT register settting..

Address Offset: 16h

Bit	R/W	Default	Description
7-0	R/W	80h	**Minimum PWM Duty Cycle Value (MPWMDCV)** This register is the same as the F1MPDCR Register.

7.11.4.17 Fan 1 Temperature LIMIT Register (F1TLIMITR)

This register specifies the temperature LIMIT value for Fan 1 assigned to the Zone 1.

Address Offset: 17h

Bit	R/W	Default	Description
7-0	R/W	5Ah	**Temperature LIMIT Value (TLIMITV)** When the temperature exceeds this limit, the Fan will be turned on and speed increased according to the SmartAuto Fan algorithm based on the setting in bits 6-4 of the SmartAuto Fan Minimum-region Speed Range register(AFMSRR). **Bit Minimum PWM Duty** 80h -128 degree C … … Ceh -50 degree C … … 00h 0 degree C … … 32h 50 degree C … … 7Fh 127 degree C

7.11.4.18 Fan 2 Temperature LIMIT Register (F2TLIMITR)

This register specifies the temperature LIMIT value for Fan 2 assigned to the Zone 2.

Address Offset: 18h

Bit	R/W	Default	Description
7-0	R/W	5Ah	**Temperature LIMIT Value (TLIMITV)** This register is the same as the F1TLIMITR register.

7.11.4.19 Fan 1 Absolute Temperature LIMIT Register (F1ATLIMITR)

This register specifeis the absolute temperature LIMIT value for Fan 1 assigned to Zone 1.

Address Offset: 19h

Bit	R/W	Default	Description
7-0	R/W	64h	**Absolute Temperature LIMIT Value (ATLIMITV)** In a SmartAuto Fan mode, when the current temperature exceeds this limit, the Fan will be running on PWM duty 100% except those disable by FANxCNF register. **BITS Temperature** 80h -128 degree C … … Ceh -50 degree C … … 00h 0 degree C … … 32h 50 degree C … … 7Fh 127 degree C

7.11.4.20 Fan 2 Absolute Temperature LIMIT Register (F2ATLIMITR)

This register specifies the absolute temperature LIMIT value for Fan 2 assigned to Zone 2.

Address Offset: 1Ah

Bit	R/W	Default	Description
7-0	R/W	64h	**Absolute Temperature LIMIT Value (ATLIMITV)** The same as the F1ATLIMITR register.

7.11.4.21 Zone Hysteresis Register (ZHYSR)

This register controls the amount that the Fan will turn off when the temperature is less than the Temperatur LIMIT value.

Address Offset: 1Bh

Bit	R/W	Default	Description
7-4	R/W	4h	**Zone Hysteresis Value (ZHYSV)** Used In SmartAuto Fan mode. Bits 7-4 are assigned to Fan 2 and bit 3-0 are assigned to Fan 1. **Bits HYS value** 0h 0 degree C … … 5h 5 degree C … … Fh 15 degree C
3-0		4h	**Zone Hysteresis Value (ZHYSV)** Bits 3-0 are assigned to Fan 1 and others are the same as Bit7-0.

7.11.4.22 Fan 1 Temperature Record Register (F1TRR)

In a SmartAuto Fan 1 enabled operation, the register is uesd to input the temperature to Smartautofan Fan1 controller, and the programmer needs to update the register value when Zone 1 temperature is changed .

Address Offset: 1Ch

Bit	R/W	Default	Description
7-0	R/W	5Ah	**Current Temperature Value (CTEMPV)** The value of the current temperature is represented as follows: **BITs 7-0 Current Temperature** 80h -128 degree C … … Ceh -50 degree C … … 00h 0 degree C … … 32h 50 degree C … … 7Fh 127 degree C

7.11.4.23 Fan 2 Temperature Record Register (F2TRR)

In a SmartAuto Fan 2 enabled operation, the register is uesd to input the temperature to Smartautofan fan2 controller, and the programmer needs to update the register value when Zone 2 temperature is changed .

Address Offset: 1Dh

Bit	R/W	Default	Description
7-0	R/W	5Ah	**Current Temperature Value (CTEMPV)** This register is the same as the F1TRR register.

7.11.4.24 Fan 1 Tachometer LSB Reading Register (F1TLRR)

This register reflects the LSB value of the current tachometer of the Fan. The value is represented for each fan in a 16 bits. Fan 1 corresponds to TACH0 (tachometer input of fan1).

Address Offset: 1Eh

Bit	R/W	Default	Description
7-0	R	-	**Current Tachometer LSB Value (CTACHLV)** The value of bit 7-0 denotes LSB Tachometer speed.

7.11.4.25 Fan 1 Tachometer MSB Reading Register (F1TMRR)

This register reflects the MSB value of the current tachometer of the Fan. The value is represented for each fan in a 16 bits. Fan 1 corresponds to TACH0.

Address Offset: 1Fh

Bit	R/W	Default	Description
7-0	R	-	**Current Tachometer MSB Value (CTACHMV)** The value of bits 7-0 denotes MSB Tachometer speed.

7.11.4.26 Fan 2 Tachometer LSB Reading Register (F2TLRR)

This register reflects the LSB value of the current tachometer of the Fan. The value is represented for each fan in a 16 bits. Fan 2 corresponds to TACH1 (tachometer input of fan2)..

Address Offset: 20h

Bit	R/W	Default	Description
7-0	R	-	**Current Tachometer LSB Value (CTACHLV)** The value of bits 7-0 denotes the LSB Tachometer speed.

7.11.4.27 Fan 2 Tachometer MSB Reading Register (F2TMRR)

This register reflects the MSB value of the current tachometer of the Fan. The value is represented for each fan in a 16-bit binary digits. Fan 2 corresponds to TACH1.

Address Offset: 21h

Bit	R/W	Default	Description
7-0	R	-	**Current Tachometer MSB Value (CTACHMV)** The value of bits 7-0 denotes MSB Tachometer speed.

7.11.4.28 Zone Interrupt Status Control Register (ZINTSCR)

The zone bits of the register indicate the temperature violation when the measured temperature violates the Limit in Temperature LIMIT register set for any of the two thermal zones.

Address Offset: 22h

Bit	R/W	Default	Description
7	R	0b	**Zone 2 Limit Exceeded (Z2LE)** Set 1 when the temperature measured by Zone 2(remote) is larger than the limit set in Temperature Limit Register.
6	R	0b	**Zone 1 Limit Exceeded (Z1LE)** Set 1 when the temperature measured by Zone 1(internal) is larger than the limit set in Temperature Limit Register.
5	R/W	0b	**TACH1 Data-valid Interrupt Enable(T1DIE)** 1: Enable interrupt to R8032 when fan1 tachometer data is valid. 0: Disable interrupt to R8032 when fan1 tachometer data is valid.
4	R/WC	0b	**TACH1 Data-valid Interrupt Clear(T1DIC)** Write one to clear the Interrupt status, which is caused when fan 1 tachometer data is valid; writing zero is ignored.
3	R	0b	**TACH1 Data-valid Interrupt Status(T1DIS)** 1: Fan1 tachometer data-valid event occurs. 0: No fan1 tachometer data-valid event occurs.
2	R/W	0b	**TACH2 Data-valid Interrupt Enable(T2DIE)** 1: Enable interrupt to R8032 when fan 2 tachometer data is valid. 0: Disable interrupt to R8032 when fan 2 tachometer data is valid.
1	R/WC	0b	**TACH2 Data-valid Interrupt Clear(T2DIC)** Write one to clear Interrupt status, which is caused when fan 2 tachometer data is valid; writing zero is ignored.
0	R	0b	**TACH2 Data-valid Interrupt Status(T2DIS)** 1: Fan2 tachometer data-valid event occurs. 0: No fan2 tachometer data-valid event occurs.

7.11.4.29 Zone Temperature Interrupt Enable Register (ZTIER)

The register is used to enable the interrupt to the EC 8032 via INT7 when the zone temperature event occurs, either zone 1 limit exceeded or zone 2 limit exceeded.

Address Offset: 23h

Bit	R/W	Default	Description
7	R/W	0b	**Zone Temperature Event Enable (ZTEE)** This bit enables interrupt (INT7) to INTC if Z1LE and Z2LE bit in ZINTSCR register is set. 0: Disable 1: Enable
6	-	-	**Reserved**
5-2	-	0b	**Reserved**
1	R/W	0b	**PWM Clock Counter Enable (PCCE)** 1: Enable PWMs clock counter. Set this bit to 1 after all other registers have been set. 0: Disable PWMs clock counter

Bit	R/W	Default	Description
0	R/W	0b	**PWM Test Mode (PWMTM)** 1: PWM switches to a test mode 0: PWM works on a normal mode

7.11.4.30 Channel 4 Clock Prescaler Register (C4CPRS)

This register controls the cycle time and the minimal pulse width of channel 4-7.

Address Offset: 27h

Bit	R/W	Default	Description
7-0	R/W	00b	**Prescaler Divider Value (PSDV7-0)** PWM input clock is divided by the number of PSDV15-0 + 1 except 0 value. For example, the value of 0001h results in a divide by 2 and the value of FFFFh results in a divide by 65536 except 0 value. Set value 0 to disable clock prescaler divider. The contents of this register may be changed only when the PWM module is in a PWM inhibit mode. This register defines the low byte and the next register C4MCPRS defines the high byte.

7.11.4.31 Channel 4 Clock Prescaler MSB Register (C4MCPRS)

This register controls the cycle time and the minimal pulse width of channel 4-7.

Address Offset: 28h

Bit	R/W	Default	Description
7-0	R/W	00b	**Prescaler Divider Value (PSDV15-8)** Refer to the previous register for the details.

7.11.4.32 Channel 6 Clock Prescaler Register (C6CPRS)

This register controls the cycle time and the minimal pulse width of channel 6.

Address Offset: 2Bh

	R/W	Default	Description
7-0	R/W	00b	**Prescaler Divider Value (PSDV7-0)** PWM input clock is divided by the number of PSDV15-0 + 1 except 0 value. For example, the value of 0001h results in a divide by 2 and the value of FFFFh results in a divide by 65536 except 0 value. Set value 0 to disable clock prescaler divider. The contents of this register may be changed only when the PWM module is in a PWM inhibit mode. This register defines the low byte and the next register C6MCPRS defines the high byte.

7.11.4.33 Channel 6 Clock Prescaler MSB Register (C6MCPRS)

This register controls the cycle time and the minimal pulse width of channel 6.

Address Offset: 2Ch

Bit	R/W	Default	Description

Bit	R/W	Default	Description
7-0	R/W	00b	**Prescaler Divider Value (PSDV15-8)** Refer to the previous register for the details.

7.11.4.34 Channel 7 Clock Prescaler Register (C7CPRS)

This register controls the cycle time and the minimal pulse width of channel 7.

Address Offset: 2Dh

Bit	R/W	Default	Description
7-0	R/W	00b	**Prescaler Divider Value (PSDV7-0)** PWM input clock is divided by the number of PSDV15-0 + 1 except 0 value. For example, the value of 0001h results in a divide by 2 and the value of FFFFh results in a divide by 65536 except 0 value. Set value 0 to disable clock prescaler divider. The contents of this register may be changed only when the PWM module is in a PWM inhibit mode. This register defines the low byte and the next register C7MCPRS defines the high byte.

7.11.4.35 Channel 7 Clock Prescaler MSB Register (C7MCPRS)

This register controls the cycle time and the minimal pulse width of channel 7.

Address Offset: 2Eh

Bit	R/W	Default	Description
7-0	R/W	00b	**Prescaler Divider Value (PSDV15-8)** Refer to the previous register for the details.

7.11.4.36 Fan 1 Temperature Criterion Register 1-3 (F1TC1-3)

In a SmartAuto Fan mode1, this register is set by software, and used to change the fan1 PWM output according to the relational PWM duty cyle value of F1PDC1-3 register.

Address Offset: 30h-32h (Default : 3Ch, 46h, 50h)

Bit	R/W	Default	Description
7-0	R/W	--	**Criterion Temperature Setting (CTEMPS)** The value of the criterion temperature is represented as follows: **Bits 7-0 Current Temperature** 80h -128 degree C … … Ceh -50 degree C … … 00h 0 degree C … … 32h 50 degree C … … 7Fh 127 degree C

7.11.4.37 Fan 2 Temperature Criterion Register 1-3(F2TC1-3)

In a SmartAuto Fan mode1, this register is set by software, and is used to change the Fan2 PWM output according to the relational PWM duty cyle value of F2PDC1-3 register.

Address Offset: 34h-36h (Default : 3Ch, 46h, 50h)

Bit	R/W	Default	Description
7-0	R/W	--	**Criterion Temperature Setting (CTEMPS)** The same as the F1TC1-3 register

7.11.4.38 Fan 1 PWM Duty Cycle Criterion Register 1-3(F1PDC1-3)

In a SmartAuto Fan mode1, the registers specify the fan 1 Duty cycle that PWM will output when the measured termperature reaches the settting value of the relational F1TC1-3 register.

Address Offset: 38h-3Ah (Default : 3Ch, 46h, 50h)

Bit	R/W	Default	Description
7-0	R/W	--	**PWM Duty Cycle Value (PWMDCV)** The same as the F2PDC1-3 register

7.11.4.39 Fan 2 PWM Duty Cycle Criterion Register 1-3(F2PDC1-3)

In a SmartAuto Fan mode1, the registers specify the fan 2 Duty cycle that PWM will output when the measured termperature reaches the settting value of the relational F2TC1-3 register.

Address Offset: 3Ch-3Eh (Default : 3Ch, 46h, 50h)

Bit	R/W	Default	Description
7-0	R/W	--	**PWM Duty Cycle Value (PWMDCV)** The value of this register is the same as that of the DCRi register, which defines the number of the clock. The number determines the high period of one PWMi cycle when INVPi bit is 0 in PWMPOL register.

7.11.5 PWM Programming Guide

Figure 7-27. Program Flow Chart for PWM Channel Output

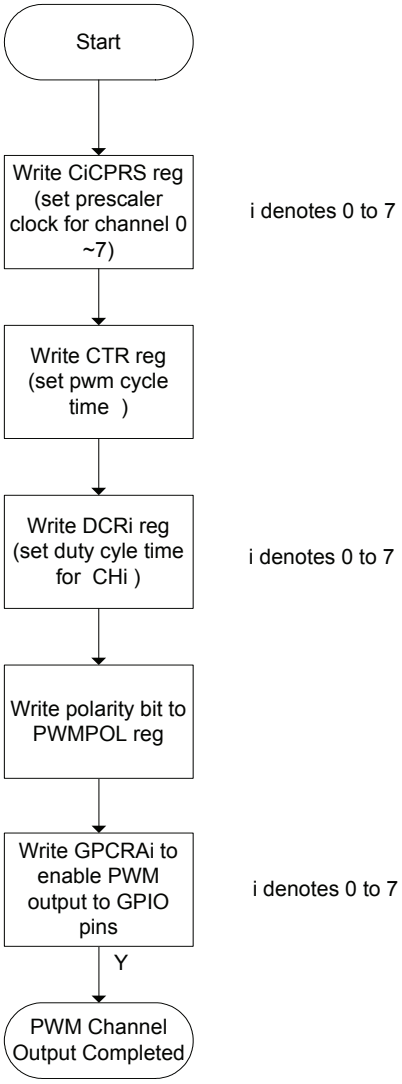

Figure 7-28. Program Flow Chart for SmartAuto Fan Channel Output

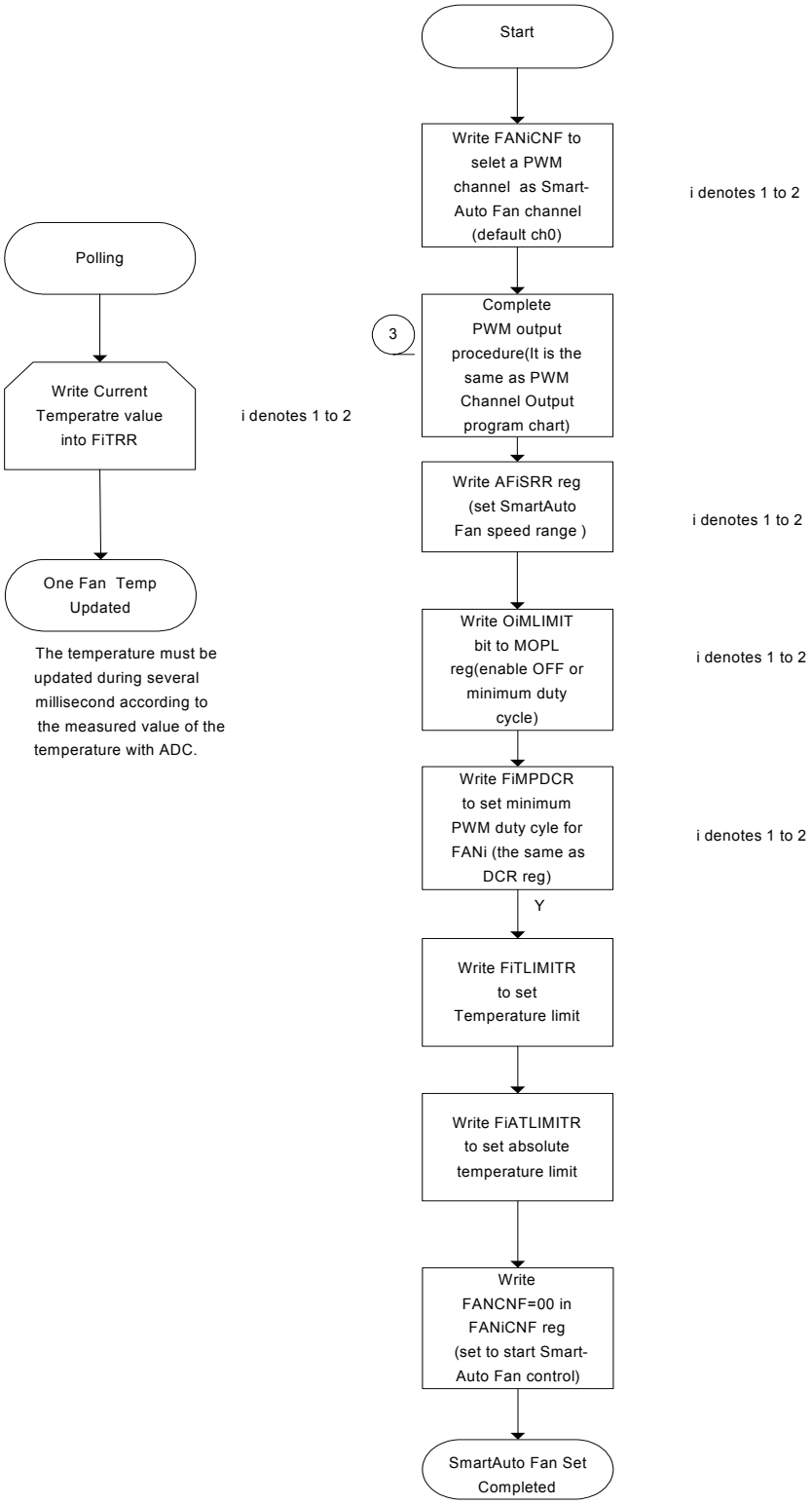

7.12 EC Access to Host Controlled Modules (EC2I Bridge)

7.12.1 Overview

The module enables EC access to PNPCFG and SWUC modules. It can access the host domain modules with host on alternate usage or take control of it and prevent any host from accessing that module.

7.12.2 Features

- Supports lock bit to prevent conflicts in host-controlled module.
- Supports Super I/O I-Bus arbitration
- Supports Super I/O access lock violation indication

7.12.3 Functional Description

The EC2I bridge enables the EC to access the Host Controlled module registers (e.g., host configuration module(PNPCFG) and SWUC), using the I-Bus which is arbitrated by I-Bus Arbiter to prevent I-Bus grant from fighting between EC and the host side. The bridge provides a lock bit to control the access of the Host Controlled modules. When the relative lock bit is cleared, the host is allowed to access to the Host Controlled modules registers. When the relative lock bit is set, the host is not allowed to access to the Host Controlled module registers (i.e., write operations are ignored and read operations return the unknown). Whenever the host accesses to the locked register, a violation flag is set on the respective bit in the SIOLV register.
EC should access the Host Controlled modules only after preventing host accessing to the module (using lock bits). The IB arbiter arbitrates IB usage between the host and EC. If an LPC transaction has started prior to the beginning of EC transaction, EC waiting for the completion of the LPC transaction. If EC transaction starts prior to LPC transaction, the LPC translation needs to wait for the completion of EC transaction.
EC firmware may access the Host Controlled modules only when VSTBY is on and VCC is on and LPCCLK is active.

EC Read Operation from a Host Controlled module register, refer to the followings:
1. Set CSAE bit in IBCTL register.
2. Make sure that both CRIB and CWIB bits in IBCTL register are cleared.
3. Setting its enable bit in IBMAE register for access module, only one module can enable at a time.
4. Assign the offset of the register in the device in IHIOA register.
5. Write 1 to CRIB bit in IBCTL register.
6. Read the CRIB bit in IBCTL until it returns 0.
7. Read the data from IHD register.

EC Write Operation from a Host Controlled module register, refer to the followings:
1. Set CSAE bit in IBCTL register.
2. Make sure that both CRIB and CWIB bits in IBCTL register are cleared.
3. Setting its enable bit in IBMAE register for access module, only one module can enable at a time.
4. Assign the offset of the register in the device in IHIOA register.
5. Write the data to IHD register, which begins a write transaction.
6. Read the CWIB bit in IBCTL until it returns 0, which represents that a write transaction has been finished.

For minimal conflict between host and EC in the use of Host Controlled modules, refer to the followings.

Notice for Read/Write Operation
1. The host is allowed to access the Host Controlled module only when the corresponding lock bit is cleared.

7.12.4 EC Interface Registers

The following set of registers is accessible only by the EC. The registers are maintained by VSTBY.
The registers are listed below and the base address is 1200h.

Table 7-23. EC View Register Map, EC2I

7	0	Offset
Indirect Host I/O Address.(IHIOA)		00h
Indirect Host Data (IHD)		01h
Lock Super I/O Host Access (LSIOHA)		02h
Super I/O Access Lock Violation (SIOLV)		03h
EC to I-Bus Modules Access Enable (IBMAE)		04h
I-Bus Control (IBCTL)		05h

For a summary of the abbreviations used for the register type, see “Register Abbreviations and Access Rules”.

7.12.4.1 Indirect Host I/O Address Register (IHIOA)

This register defines the host I/O address for read or write transactions initiated by EC from/to the Host Controlled modules. The I/O address is an offset from the LSB bits of the address of the host controlled module. The accessed module is selected using EC to IB Modules Access Enable Register (IBMAE).

Address Offset: 00h

Bit	R/W	Default	Description
7-0	R/W	00b	**Indirect Host I/O Offset (IHIOO)** These bits indicate the offsets within the device range are allowed.

7.12.4.2 Indirect Host Data Register (IHD)

This register holds host data for read or write transactions initiated by EC from/to the Host Controlled modules.

Address Offset: 01h

Bit	R/W	Default	Description
7-0	R/W	00b	**Indirect Host Data (IHDA)**

7.12.4.3 Lock Super I/O Host Access Register (LSIOHA)

This register controls locking of host access to the Host Controlled modules.

Address Offset: 02h

Bit	R/W	Default	Description
7-2	-	0h	**Reserved**
1	-	-	**Reserved**
0	R/W	0b	**Lock PNPCFG Registers Host Access (LKCFG)** 0: Host access to the PNPCFG Registers is enabled 1: Host access to the PNPCFG Registers is disabled

7.12.4.4 Super I/O Access Lock Violation Register (SIOLV)

This register provides an error indication when a host lock violation occurs on Host Controlled modules access.

Address Offset: 03h

Bit	R/W	Default	Description
7-2	-	0h	**Reserved**
1	-	-	**Reserved**
0	R/WC	0b	**PNPCFG Register Lock Violation (CFGLV)** 0: There is no lock violation when the host accesses PNPCFG registers. 1: when the host accesses PNPCFG register but LKCFG bit in LSIOHA register is set, this bit is set to indicate a violation and can be write-1-clear.

7.12.4.5 EC to I-Bus Modules Access Enable Register (IBMAE)

This register enables EC access to the Host Controlled modules. Only one of the bits in this register may be set at a time.

Address Offset: 04h

Bit	R/W	Default	Description
7-3	-	0h	**Reserved**
2	R/W	0b	**Mobile System Wake-Up Control (SWUC) Access Enable (SWUCAE)** 0: EC access to the SWUC Registers is disabled. 1: EC access to the SWUC Registers is enabled.
1	-	-	**Reserved**
0	R/W	0b	**PNPCFG Register EC Access Enable (CFGAE)** 0: EC access to the PNPCFG Registers is disabled. 1: EC access to the PNPCFG Registers is enabled.

7.12.4.6 I-Bus Control Register (IBCTL)

This register allows EC to the I-Bus Bridge operation.

Address Offset: 05h

Bit	R/W	Default	Description
7-4	-	0h	**Reserved**
3	-	-	**Reserved**
2	R	0b	**EC Write to IB (CWIB)** 0: No write operation is detected. 1: when write data to the IHD register. It is cleared when the write to the IB is completed.
1	R/W	0b	**EC Read from IB (CRIB)** Set 1 to begin a read from the IB; the read operation is based on the setting in IBMAE register. A write of 0 to this bit is ignored. This bit is cleared when the read operation is completed and represents the data in IHD register is available.
0	R/W	0b	**EC to IB Access Enabled (CSAE)** 0: EC access to the IB bus is disabled (default). 1: EC access to the IB bus is enabled. The module to be accessed is selected in the IBMAE register.

7.12.5 EC2I Programming Guide

The read/write cycles PNPCFG and SWUC modules via EC2I are only valid when VCC is supplied. It means that such cycles may be executed after every VCC power-on.

Figure 7-29. Program Flow Chart for EC2I Read

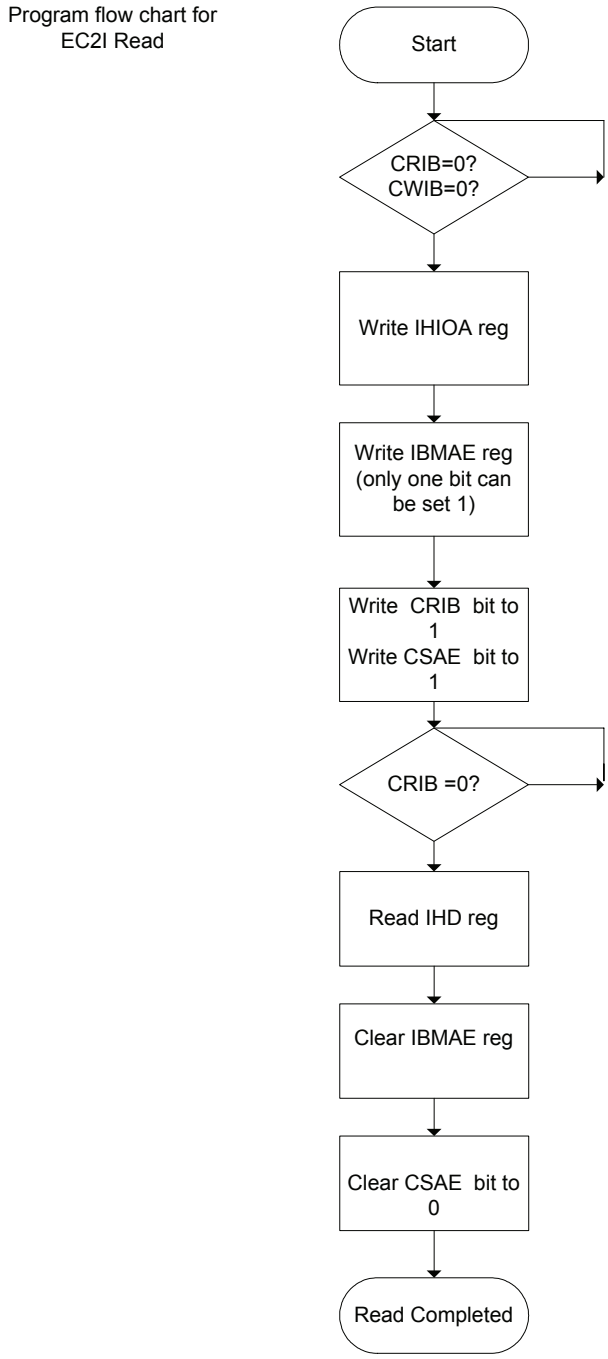

Figure 7-30. Program Flow Chart for EC2I Write

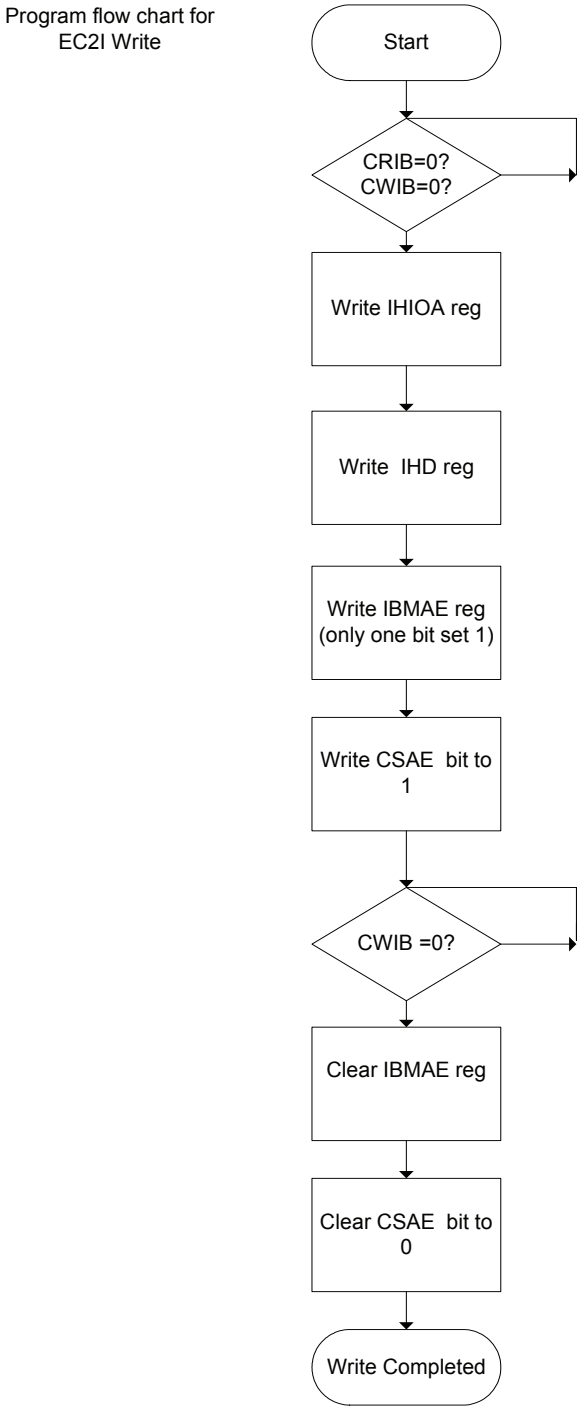

7.13 External Timer and External Watchdog (ETWD)

7.13.1 Overview

Besides the internal timer 0, 1, 2 and WDT inside the 8032, there is External Timer/WDT outside the 8032. External Timer/WDT is based on 32.768 k Clock and still works when EC is in Idle/Doze/Sleep mode. The external timer is recommended to replace internal timer for periodical wakeup task.

External Timer/WDT have less power consumption than internal Timer/WDT due to the low frequency.

ETWD module cannot count external signal sources from pins. If the firmware wants to count external signal sources from pins, refer to TMRI0, TMRI1, TACH0 and TACH1. TMRI0/TMRI1 are used as Timer1/2 sources of 8032 and TACH0/1 are tachometer inputs of PWM.

7.13.2 Features

- 32.768 kHz, 1.024 kHz and 32 Hz prescaler for External Timer
- 16-bit count-down External Timer
- 16-bit count-down External WDT

Figure 7-31. Simplified Diagram

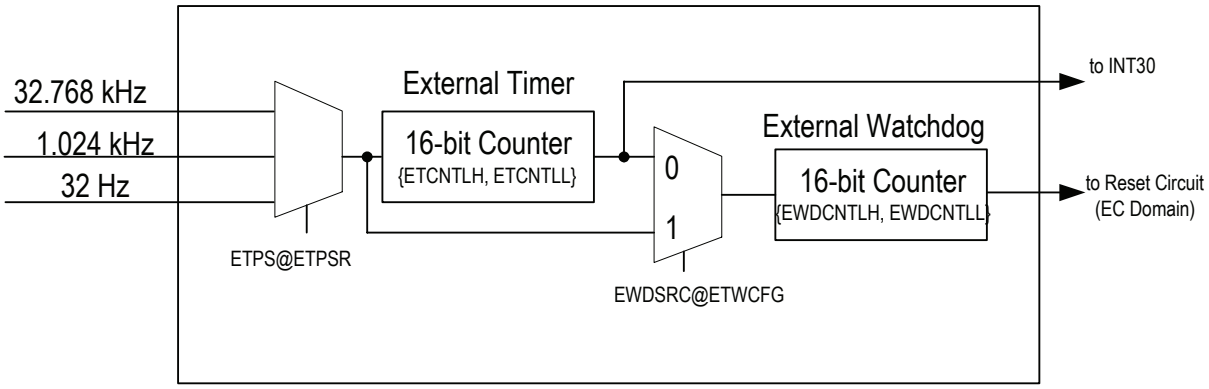

7.13.3 Functional Description

7.13.3.1 External Timer Operation

The External Timer is a 16-bit counter down timer. Its clock source is based on 32.768 k Clock and can be selected by a prescaler defined at ETPS field in ETPSR register.

The count number is defined in ETCNTLH and ETCNTLL registers. External Timer is stopped after reset and started after writing data to ETCNTLL register and never stops until reset. It asserts an interrupt to INTC when it counts to zero every time.

The External Timer re-starts when
- it counts to zero periodically.
- data is written to ETCNTLL register.
- 1 is written to ETRST bit in ETWCTRL register.

External Timer asserts periodical interrupt to EC 8032 via INT30 of INTC.

7.13.3.2 External WDT Operation

External WDT is a 16-bit counter down timer. Its clock source is either External Timer output or the same clock source of External Timer, and it is controlled by EWDSRC bit in ETWCFG register.
The count number is defined in EWDCNTL register. External WDT is stopped after reset and started after writing data to EWDCNTL register and cannot be stopped until reset. It asserts an External Watchdog Reset to EC domain when it counts to zero. External WDT requires starting External Timer regardless of EWDSRC field in ETWCFG register. External WDT cannot be started until External Timer is started.

The External WDT re-starts when it is touched by the firmware.
There are two following ways to touch (re-start) External WDT:
- Writing data to EWDCNTL register (if LEWDCNTL bit in ETWCFG register is not set)
- Writing 5Ch to EWDKEYR register, called key-match

External WDT asserts an External Watchdog Reset to EC domain when
- it counts to zero.
- data except 5Ch is written to EWDKEYR register.

7.13.4 EC Interface Registers

The following set of the registers is accessible only by the EC. They are listed below and the base address is 1F00h.

Table 7-24. EC View Register Map, ETWD

7	0	Offset
External Timer/WDT Configuration Register (ETWCFG)		01h
External Timer Prescaler Register (ETPSR)		02h
External Timer Counter High Byte (ETCNTLHR)		03h
External Timer Counter Low Byte (ETCNTLLR)		04h
External Timer/WDT Control Register (ETWCTRL)		05h
External WDT Counter High Byte (EWDCNTLHR)		09h
External WDT Counter Low Byte (EWDCNTLLR)		06h
External WDT Key Register (EWDKEYR)		07h

For a summary of the abbreviations used for the register type, see “Register Abbreviations and Access Rules”

7.13.4.1 External Timer/WDT Configuration Register (ETWCFG)

Address Offset: 01h

Bit	R/W	Default	Description
7	-	0h	**Reserved**
6	R/W	0b	**External WDT Stop Mode (EWDSM)** 1: Stop counting WDT when LPC memory/FWH cycles are processing. 0: Otherwise
5	R/W	0b	**External WDT Key Enabled (EWDKEYEN)** 1: Enable the key match function to touch the WDT 0: Otherwise
4	R/W	0b	**External WDT Clock Source (EWDSRC)** 1: Select clock after prescaler of the external timer 0: Select clock from the output of the external timer
3	R/W	0b	**Lock EWDCNTL Register (LEWDCNTL)** 1: Writing to EWDCNTL is ignored. 0: Writing to EWDCNTL is allowed.
2	R/W	0b	**Lock ETCNTLx Registers (LETCNTL)** 1: Writing to ETCNTLH/ETCNTL is ignored. 0: Writing to ETCNTLH/ETCNTL is allowed.
1	R/W	0b	**Lock ETPS Register (LETPS)** 1: Writing to ETPS is ignored. 0: Writing to ETPS is allowed.
0	R/W	0b	**Lock ETWCFG Register (LETWCFG)** 1: Writing to ETWCFG itself is ignored, and this bit can't be cleared until reset. 0: Writing to ETWCFG itself is allowed.

7.13.4.2 External Timer Prescaler Register (ETPSR)

Address Offset: 02h

Bit	R/W	Default	Description
7-2	-	0h	**Reserved**
1-0	R/W	00b	**External Timer Prescaler Select (ETPS)** These bits control the clock input source to the external timer. 00b: 32.768 KHz 01b: 1.024 KHz 10b: 32 Hz 11b: Reserved Note the prescaler will not output clock until data is written to ETCNTLLR register.

7.13.4.3 External Timer Counter High Byte (ETCNTLHR)

Address Offset: 03h

Bit	R/W	Default	Description
7-0	R/W	FFh	**External Timer Counter High Byte (ETCNTLH)** Define the count number of high byte of the 16-bit count-down timer.

7.13.4.4 External Timer Counter Low Byte (ETCNTLLR)

Address Offset: 04h

Bit	R/W	Default	Description
7-0	R/W	FFh	**External Timer Counter Low Byte (ETCNTLL)** Define the count number of low byte of the 16-bit count-down timer. The external timer starts or re-starts after writing this register.

7.13.4.5 External Timer/WDT Control Register (ETWCTRL)

Address Offset: 05h

Bit	R/W	Default	Description
7-2	-	00h	**Reserved**
1	R	0b	**External Timer Terminal Count (ETTC)** 1: Indicates the external timer has counted down to zero, and it is cleared after reading it. 0: Otherwise Writing to this bit is ignored.
0	W	-	**External Timer Reset (ETRST)** Writing 1 forces the external timer to re-start. Writing 0 is ignored. Read always returns zero.

7.13.4.6 External WDT Counter High Byte (EWDCNTLHR)

Address Offset: 09h

Bit	R/W	Default	Description
7-0	R/W	00h	**External WDT Counter High Byte (EWDCNTL)** Define the count number of high byte of the 16-bit count-down WDT.

7.13.4.7 External WDT Low Counter (EWDCNTLLR)

Address Offset: 06h

Bit	R/W	Default	Description
7-0	R/W	0Fh	**External WDT Low Counter (EWDCNTL)** Define the count number of 16-bit count-down WDT.

7.13.4.8 External WDT Key Register (EWDKEYR)

Address Offset: 07h

Bit	R/W	Default	Description
7-0	W	-	**External WDT Key (EWDKEY)** External WDT is re-started (touched) if 5Ch is written to this register. Writing with other values causes an External Watchdog Reset. This function is enabled by EDWKEYEN bit. Read returns unpredictable value.

7.14 General Control (GCTRL)

7.14.1 Overview

This module controls EC function that doesn't belong to the specified module.

7.14.2 Features

- By module reset

7.14.3 Functional Description

Wait Next Clock Rising:
When writing 0 WNCKR register, the R8032TT will be paused and wait for a low to high transition of the internal 65.536KHz clock. This may be useful to get a delay.

For a loop that writing 0 to WNCKR register for N times, the delay value will be
((N-1) / 65.536KHz) to (N / 65.536KHz)

e.g.
Consecutively writing 0 to WNCKR register for 33 times get 0.5ms delay with –2.3% ~ +0.7% tolerance.
Consecutively writing 0 to WNCKR register for 66 times get 1ms delay with –0.8% ~ +0.7% tolerance.
Consecutively writing 0 to WNCKR register for 132 times get 2ms delay with –0.05% ~ +0.7% tolerance.

7.14.4 EC Interface Registers

The following set of the registers is accessible only by EC. They are listed below and the base address is 2000h.

Table 7-25. EC View Register Map, GCTRL

7 — 0	Offset
Chip ID Byte 1 (ECHIPID1)	00h
Chip ID Byte 2 (ECHIPID2)	01h
Chip Version (ECHIPVER)	02h
Reserved	03h
Identify Input Register (IDR)	04h
Reserved	05h
Reset Status (RSTS)	06h
Reset Control 1 (RSTC1)	07h
Reset Control 2 (RSTC2)	08h
Reset Control 3 (RSTC3)	09h
Base Address Select (BADRSEL)	0Ah
Wait Next Clock Rising (WNCKR)	0Bh
Oscillator Control Register (OSCTRL)	0Ch
Special Control 1 (SPCTRL1)	0Dh
Reset Control Host Side (RSTCH)	0Eh

For a summary of the abbreviations used for the register type, see "Register Abbreviations and Access Rules".

7.14.4.1 Chip ID Byte 1 (ECHIPID1)

The content of this EC side register is the same as that of the CHIPID1 register in the host side.

Address Offset: 00h

Bit	R/W	Default	Description
7-0	R	85h	**Chip ID Byte 1 (ECHIPID1)** This register contains the Chip ID byte 1.

7.14.4.2 Chip ID Byte 2 (ECHIPID2)

The content of this EC side register is the same as that of the CHIPID2 register in the host side.

Address Offset: 01h

Bit	R/W	Default	Description
7-0	R	12h	**Chip ID Byte 2 (ECHIPID2)** This register contains the Chip ID byte 2.

7.14.4.3 Chip Version (ECHIPVER)

This register contains revision ID of this chip.
The content of this EC side register is the same as that of the CHIPVER register in the host side.

Address Offset: 02h

Bit	R/W	Default	Description
7-0	R	22h	**Chip Version (ECHIPVER)**

7.14.4.4 Identify Input Register (IDR)

Address Offset: 04h

Bit	R/W	Default	Description
7	R	-	**Identify Input 7 (ID7)**
6	R	-	**Identify Input 6 (ID6)**
5	R	-	**Identify Input 5 (ID5)**
4	R	-	**Identify Input 4 (ID4)**
3	R	-	**Identify Input 3 (ID3)**
2	R	-	**Identify Input 2 (ID2)**
1	R	-	**Identify Input 1 (ID1)**
0	R	-	**Identify Input 0 (ID0)**

7.14.4.5 Reset Status (RSTS)

Address Offset: 06h

Bit	R/W	Default	Description
7-6	R/W	10b	**VCC Detector Option (VCCDO)** 10b: The VCC power status is detected by internal circuit. 00b: The VCC power status is treated as power-off. 01b: The VCC power status is treated as power-on. otherwise: reserved No matter which option is selected, the VCC power status is always recognized as power off if LPCPD# input is level low. The VCC power status is used as internal “power good” signal to prevent current leakage while VCC is off. The current VCC power status can be read from VCCPO bit in SWCTL1 register in section 6.4.5.1 on page 91. Intentionally toggling this field when VCC is supplied can reset logic VCC domain in EC.
5	-	-	**Reserved**
4	-	-	**Reserved**
3	R/W	1b	**Host Global Reset (HGRST)** 0: The reset source of PNPCFG is RSTPNP bit in RSTCH register and WRST#. 1: The reset source of PNPCFG are RSTPNP bit in RSTCH register, internal VCC status controlled by VCCDO bit in RSTS regsiter, LPCPD#, LPCRST# and WRST#.
2	R/W	1b	**Global Reset (GRST)** This bit controls whether to reset EC domain globally during Internal/External Watchdog Reset. 0: Only reset 8032, and each module can be reset by RSTC register 1: Reset all the EC domain
1-0	R	-	**Last Reset Source (LRS)** If this register field is used, it is required to read this field once and only one time after reset. 00b, 01b: VSTBY Power-Up Reset or Warm Reset 10b: Internal Watchdog Reset 11b: External Watchdog Reset

7.14.4.6 Reset Control 1 (RSTC1)

Write 1 to the selected bit(s) to possibly reset corresponding module(s).
Refer to VCCDO field in RSTS register to reset logic in VCC domain in EC.

Address Offset: 07h

Bit	R/W	Default	Description
7	W	-	**Reset SMFI (RSMFI)**
6	W	-	**Reset INTC (RINTC)**
5	W	-	**Reset EC2I (REC2I)**
4	W	-	**Reset KBC (RKBC)**
3	W	-	**Reset SWUC (RSWUC)**
2	W	-	**Reset PMC (RPMC)**
1	W	-	**Reset GPIO (RGPIO)**
0	W	-	**Reset PWM (RPWM)**

7.14.4.7 Reset Control 2 (RSTC2)

Write 1 to the selected bit(s) to possibly reset corresponding module(s).

Address Offset: 08h

Bit	R/W	Default	Description
7	W	-	**Reset ADC (RADC)**
6	W	-	**Reset DAC (RDAC)**
5	W	-	**Reset WUC (RWUC)**
4	W	-	**Reset KBS (RKBS)**
3	-	-	**Reserved**
2	W	-	**Reset EGPC (REXGPIO)**
1	W	-	**Reset CIR (RCIR)**
0	W	-	**Reset TMKBC (RTMKBC)**

7.14.4.8 Reset Control 3 (RSTC3)

Write 1 to the selected bit(s) to possibly reset corresponding module(s).

Address Offset: 09h

Bit	R/W	Default	Description
7	-	-	**Reserved**
6	W	-	**Reset PS/2 Channel 3 (RPS23)**
5	W	-	**Reset PS/2 Channel 2 (RPS22)**
4	W	-	**Reset PS/2 Channel 1 (RPS21)** To reset the logic of PS/2 shared with all channels, write 1111b to bit 7-4 at the same time and writing 0111b is reserved.
3	-	-	**Reserved**
2	W	-	**Reset SMBUS Channel 3 (RSMB3)**
1	W	-	**Reset SMBUS Channel 2 (RSMB2)**
0	W	-	**Reset SMBUS Channel 1 (RSMB1)** To reset the logic of SMBUS shared with all channels, write 1111b to bit 3-0 at the same time and writing 0111b is reserved.

7.14.4.9 Base Address Select (BADRSEL)

Address Offset: 0Ah

Bit	R/W	Default	Description
7-2	-	-	**Reserved**
1-0	R/W	00b	**Base Address (BADDR1-0)** 00b: The register pair to access PNPCFG is 002Eh and 002Fh. 01b: The register pair to access PNPCFG is 004Eh and 004Fh. 10b: The register pair to access PNPCFG is determined by EC domain registers SWCBALR and SWCBAHR. 11b: Reserved.

7.14.4.10 Wait Next Clock Rising (WNCKR)

Address Offset: 0Bh

Bit	R/W	Default	Description
7-0	W	-	**Wait Next 65K Rising (WN65K)** Writing 00h to this register and the R8032TT program counter will be paused until the next low to high transition of 65.536 kHz clock. Writing other values is reserved.

7.14.4.11 Oscillator Control Register (OSCTRL)

Address Offset: 0Ch

Bit	R/W	Default	Description
7-1	-	-	**Reserved**
0	R/W	1b	**Oscillator Enable (OSCEN)** 1b: 32.768 kHz oscillator will keep running if VBS/VSTBY power = on/off 0b: 32.768 kHz oscillator in this case

7.14.4.12 Special Control 1 (SPCTRL1)

Address Offset: 0Dh

Bit	R/W	Default	Description
7	R/W	0b	**P80L Enable (P80LEN)** This bit will be set if 1 is written and cleared if 1 is written or there is a VCC on->off transition. This bit is supplied by the VBS power and only reset by VBS Power-Up Reset. Refer to section 7.16.3.1 on page 265. 1b: Enable P80L function. 0b: Otherwise
6	R/W	0b	**Accept Port 80h Cycle (ACP80)** This bit will be set if 1 is written and cleared if 1 is written or there is a VCC on->off transition. This bit is supplied by the VBS power and only reset by VBS Power-Up Reset. Refer to section 7.16.3.1 on page 265. 1b: The host LPC I/O cycle with address 80h will be accepted by EC. If P80LEN is set, enabling this bit to guarantee LPC I/O port 80h data can be latched even though there is a transaction cycle to BRAM or EC2I->RTC in EC side. 0b: Otherwise
5-2	-	-	**Reserved**
1-0	R/W	00b	**I2EC Control (I2ECCTRL)** 00b: I2EC is disabled. 10b: I2EC is read-only. 11b: I2EC is read-write. 01b: Reserved Refer to section 7.18.3.2 EC Memory Snoop (ECMS) on page 281.

7.14.4.13 Reset Control Host Side (RSTCH)

Address Offset: 0Eh

Bit	R/W	Default	Description
7-3	-	-	**Reserved**
2	W	-	**Reset PNPCFG (RSTPNP)**
1-0	-	-	**Reserved**

7.15 External GPIO Controller (EGPC)

7.15.1 Overview

This module controls the external GPIO (General Purpose I/O Port) chip. It can maintain bi-directional communication with the 4 external IT8301.

7.15.2 Features

- Communicate with 4 IT8301 chip
  (IT8301 is a 48-pin GPIO chip)
- Each IT8301 supports 38 GPIO ports

7.15.3 Functional Description

This module uses a three-wire bidirectional interface for data transmission. When writing the data to the External GPIO Data Register, this module will start to transmit the data (the contents of the External GPIO Data Register) to the targeted register of the external GPIO chip (the targeted register can be assigned in the External GPIO Address Register). When reading the External GPIO Data Register, the contents of the targeted register of the external GPIO chip can be read.

Because of the serial nature of the interface, the time of accessing the external GPIO chip may be longer than the time that the 8032 CPU read/write the External GPIO Controller registers. We have two methods to handle this condition.

(1). A dedicated channel ready signal (internal signal) for the 8032 CPU

The channel ready signal (internal signal) is used to inform the 8032 CPU whether the data transfer process is ended or not. When the Channel Ready Enable bit in the External GPIO Control Register is set, the channel ready signal will not be asserted until the data transfer process is ended. When the Channel Ready Enable bit is cleared, the channel ready signal is always set high no matter the data transfer process is ended or not.

(2). Enable the cycle done interrupt

If the Channel Ready Enable bit in the External GPIO Control Register is cleared, the firmware must enable the Cycle Done Interrupt Enable bit in the External GPIO Control Register to know that the data transfer process is ended or not. When writing the data to the External GPIO Data Register, this module will start to transmit the data to the targeted register of the external GPIO chip. When the transfer process is ended, the Cycle Done Status bit in the External GPIO Status Register is set and the Cycle Done Interrupt is asserted. When firmware first reads the External GPIO Data Register, this module will start to receive data from the targeted register of the external GPIO chip. When the transfer process is ended, the Cycle Done Status bit in the External GPIO Status Register is set and the Cycle Done Interrupt is asserted. Then the firmware can read again the External GPIO Data Register to get the updated data.

7.15.4 EC Interface Registers

The EGPC registers are listed below. The base address is 2100h.

Table 7-25. EC View Register Map, EGPC

7	0	Offset
External GPIO Address Register (EADDR)		00h
External GPIO Data Register (EDAT)		01h
External GPIO Control Register (ECNT)		02h
External GPIO Status Register (ESTS)		03h

7.15.4.1 External GPIO Address Register (EADDR)

Address Offset: 00h

Bit	R/W	Default	Description
7-2	R/W	00h	**Address (AD)** The 6-bit address of the targeted register of the external GPIO chip.
1-0	R/W	00h	**Chip Selection (CS)** These bits will be transmitted as external chip selection

7.15.4.2 External GPIO Data Register (EDAT).

Address Offset: 01h

Bit	R/W	Default	Description
7-0	R/W	00h	**Data (DATA)** When writing to this register, the contents of this register are sent to the targeted register of the external GPIO chip. When reading this register, the contents of the targeted register of the external GPIO chip can be read.

7.15.4.3 External GPIO Control Register (ECNT).

Address Offset: 02h

Bit	R/W	Default	Description
7-5	-	-	**Reserved**
4-2	R/W	100b	**Transmitted Data Bits (TMB)** Define the number of the data bits that will be transmitted to (or received from) the data register of the external GPIO chip. 000: 1 bit 001: 2 bits 010: 3 bits 011: 4 bits 100: 5 bits 101: 6 bits 110: 7 bits 111: 8 bits
1	R/W	0b	**Cycle Done Interrupt Enable (CDIE)** Enable or disable the interrupt generation when the Cycle Done status occurs. 0: Disable the interrupt. 1: Enable the interrupt.
0	R/W	1b	**Channel Ready Enable (CREN)** The channel ready signal (internal signal) is used to inform the 8032 CPU that the data transfer process is ended or not. When this bit is set, the channel ready signal will not be asserted until the data transfer process is ended. When this bit is cleared, the channel ready signal is always set high no matter the data transfer process is ended or not. 0: Disabled. 1: Enabled.

7.15.4.4 External GPIO Status Register (ESTS).

Address Offset: 03h

Bit	R/W	Default	Description
7-1	-	-	**Reserved**
0	R	-	**Cycle Done Status (CDS)** This bit is set when the data transfer was done.

7.16 Battery-backed SRAM (BRAM)

7.16.1 Overview

This module provides 64 bytes battery-backed memory area and power-switching circuit.

7.16.2 Features

- 64 bytes battery-backed SRAM
- Power-switching circuit
- Latches LPC I/O port 80h written data into SRAM of RTC bank 1 (P80L function)

7.16.3 Functional Description

This module provides 64 bytes battery-backed SRAM for data-saving function shared with host module BRAMLD.

Figure 7-32. BRAM Mapping Diagram

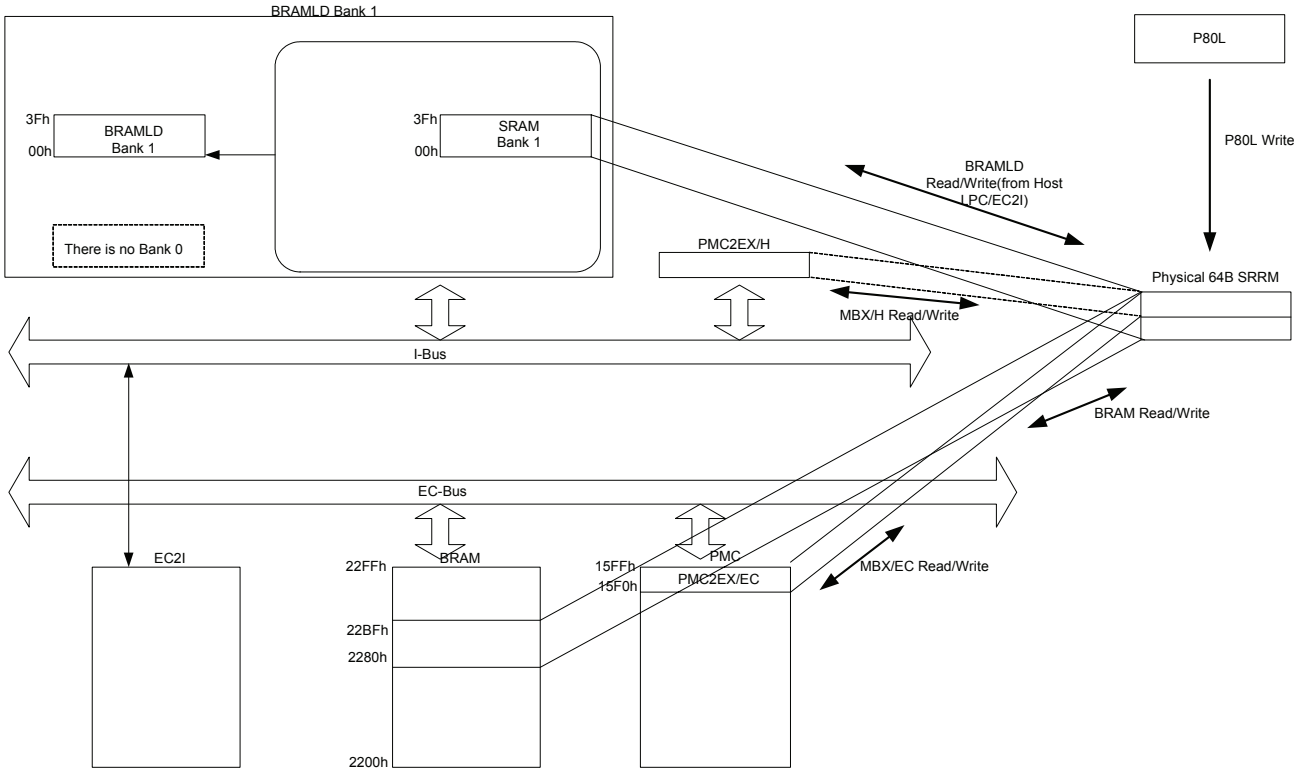

7.16.3.1 P80L

If this function is enabled by P80LEN bit in SPCTRL1 register, LPC I/O port 80h written data will be latched into SRAM of BRAM bank 1.

The 7-bit destination address range in BRAM bank 1 is determined by P80LB and P80LE registers in the host side, which constructs a queue.
P80LB: It indicates the start index of the queue. Readable/Writable.
P80LE: It indicates the end index of the queue. Readable/Writable.
P80LC: It indicates the current index of the queue. Read-only.
These three registers are supplied by VBS power and not affected by VCC status.

Whenever written data is latched, P80LC increases one. If it reaches P80LE (queue end), it will wrap back to P80LB (queue begin).

7.16.4 EC Interface Registers

The registers of the battery-backed SRAM are listed below. The base address is 2200h.

Table 7-25. EC View Register Map

7	0	Offset
SRAM Byte n Registers (SBT0)		80h
…		…
SRAM Byte n Registers (SBT63)		BFh

Note: Address mapping from 00h to 3Fh is OBSOLETE. This range is only used to be compatible with old IT8512 firmware and should not be used in new firmware.

7.16.4.1 SRAM Byte n Registers (SBTn, n= 0-63)

Address Offset: 80h – BFh for byte 0 – byte 63

Bit	R/W	Default	Description
7-0	R/W	-	**SRAM Data (SD)** When writing to this register, the contents of this register are saved to the corresponding memory space. When reading this register, the contents of the corresponding memory space can be read. For example, when writing data to the SRAM Byte 0 Register, the data will be saved to the memory space 2200h. When reading the SRAM Byte 63 Register, the data saved in memory space 223fh can be read.

7.17 Consumer IR (CIR)

7.17.1 Overview

The CIR module is used in the Consumer Remote Control equipment, and is a programmable amplitude shift keyed (ASK) serial communication protocol. By adjusting frequencies, baud rate divisor values and sensitivity ranges, CIR registers are able to support the major protocols such as RC-5, NEC, and RECS-80. New protocols can be supported by programming the software driver.

7.17.2 Features

- Supports 1 CIR channels
- Supports 28 KHz ~ 57 KHz (low frequency) or 400 KHz ~ 500 KHz (high frequency) carrier transmission
- The baud rate up to 115200 BPS (high frequency)
- Demodulation optional
- Supports transmission run-length encoding and deferral functions
- Supports one 32-byte FIFO for data transmission or data reception

Figure 7-33. Simplified Diagram

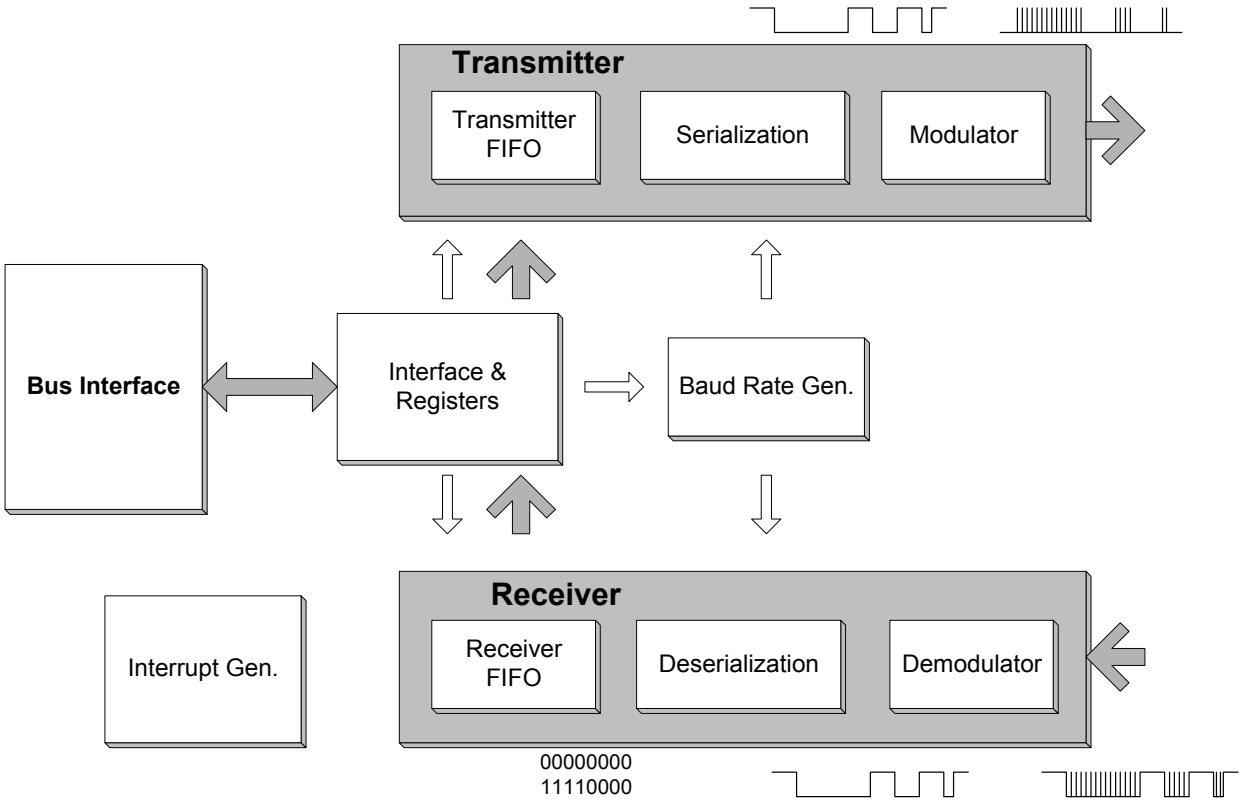

7.17.3 Functional Description

The CIR channel consists of two main elements, Transmitter and Receiver. The Transmitter transmits data to the FIFO, processes the FIFO data by serialization, modulation and sends out the data through the LED device. The Receiver is responsible for receiving the FIFO data, processing data by demodulation and deserialization, and storing data into the Receiver FIFO.

7.17.3.1 Transmit Operation

The Transmit data formats written to the Transmitter FIFO differ from one another with respect to different communication protocols. Only physical layer functions are provided in this module. The data written to the Transmitter FIFO will be exactly serialized from LSB to MSB, modulated with the carrier frequency and sent to the pad output. The communication commands are decoded by software.

Before the data transmission can be started, code byte write operations must be performed to the Transmitter FIFO C0DR. The bit TXRLE in the C0TCR should be set to “1” before the run-length decode data can be written into the Transmitter FIFO. The bit width of the serialized bit string is determined by programming the baud rate divisor registers, C0BDLR and C0BDHR. When bits HCFS and CFQ[4:0] in the C0CFR are set, either the high-speed or low-speed carrier range is selected, and the corresponding carrier frequency will also be determined. Bits TXMPM[1:0] and TXMPW[2:0] in the C0TCR specify the pulse numbers in a bit width and the required duty cycles of the carrier pulse according to the communication protocol. Only a logic 0 can activate the Transmitter LED in the format of a series of modulating pulses.

7.17.3.2 Receive Operation

The Receiver function is enabled if bit RXEN in the C0RCR is set to “1”. Either demodulated or modulated RX# signal is loaded into the Receiver FIFO, and bit RXEND in the C0RCR determines how the demodulation logic should be used. When bits HCFS and CFQ[4:0] in the C0CFR are set, either the high-speed or low-speed carrier range is selected, and the corresponding carrier frequency will also be determined. Bit RXACT in the C0RCR is set to “1” if the serial data or the selected carrier is incoming, and the sampled data will then be kept in the Receiver FIFO. Write “1” to clear bit RXACT and then stop operation of Receiver FIFO; write “0” to bit RXEN to disable all the Receiver functions. It is strongly suggested that software clear RXACT every time when you will change the expected carrier frequency.

7.17.3.3 Wakeup(Power On) Controller Programming Sequence

Software power-off is performed by setting the resetting bits of RCRST and WCRST to “1”, and the CIRPOIS bit to “0” at the initial state in the C0WPS register. When the system is on, users can reset the read/write counter to 0 at any time. However, if users need to save codes into 20 bytes in the power-switch-code area, the best way is to reset the write counter first since users may not know the value in the counter. Therefore, it is possible that users will make a mistake when saving the codes. Users can also reset the read counter before reading the code in the power-switch-code area. Before users perform the power-off function, it is necessary to save the correct length into the C0WCL register and the coded into the power-switch-code area or the power-on function will not function normally. The CIRPOIS bit is set to one when the data received by CIR for first time matches the code data on the power-switch-code area. The CIRPOIS bit is toggled when the data received again by CIR matches the code data on the power-switch-code area.

Note: If the system designer needs to use the remote power-on function, the designer should program the relative receive registers to some proper values via software before shutdown.

7.17.4 EC Interface Registers

The EC interface registers are listed below. The base address for CIR is 2300h.

Table 7-28. EC View Register Map, CIR

7	0	Offset
CIR Data Register (C0DR)		00h
CIR Master Control Register (C0MSTCR)		01h
CIR Interrupt Enable Register (C0IER)		02h
CIR Interrupt Identification Register (C0IIR)		03h
CIR Carrier Frequency Register (C0CFR)		04h
CIR Receiver Control Register (C0RCR)		05h
CIR Transmitter Control Register (C0TCR)		06h
CIR Slow Clock Control Register (C0SCK)		07h
CIR Baud Rate Divisor Low Byte Register (C0BDLR)		08h
CIR Baud Rate Divisor High Byte Register (C0BDHR)		09h
CIR Transmitter FIFO Status Register (C0TFSR)		0Ah
CIR Receiver FIFO Status Register (C0RFSR)		0Bh
CIR Wakeup Code Length Register (C0WCL)		0Dh
CIR Wakeup Code Read/Write Register (C0WCR)		0Eh
CIR Wakeup Power Control/Status Register (C0WPS)		0Fh

7.17.4.1 CIR Data Register (C0DR)

The C0R, an 8-bit register, is the data port for CIR. Data is transmitted and received through this register.
Note: Reading an empty FIFO will return a default value, ″FF″.

Address Offset: 00h

Bit	R/W	Default	Description
7-0	R/W	-	**CIR FIFO Data (CFD[7:0])** Writing data to this register causes data to be written to the Transmitter FIFO. Reading data from this register causes data to be received from the Receiver FIFO.

7.17.4.2 CIR Master Control Register (C0MSTCR)

The C0MTCR, an 8-bit register, is used to control CIR functions.

Address Offset: 01h

Bit	R/W	Default	Description
7-6	-	-	**Reserved**
5	R/W	0	**Internal Loopback Select (ILSEL)** This bit is used to determine the internal loopback source. When this bit is set to "0", the Serial data is the internal loopback source. When this bit is set to "1", the Modulated data is the internal loopback source.
4	R/W	0	**Internal Loopback Enable (ILE)** This bit is used to execute internal loopback for test and must be "0" in normal operation. When this bit is set to "0", the internal Loopback mode is disabled. When this bit is set to "1", the internal Loopback mode is enabled.
3-2	R/W	0	**FIFO Threshold Level (FIFOTL)** These two bits are used to set the FIFO Threshold Level. The FIFO length is 32 bytes for TX or RX function (ILE = 0) in normal operation, and 16 bytes for both TX and RX in the internal loopback mode (ILE = 1). **16-Byte Mode / 32-Byte Mode** **00: 1 / 1 (Default)** 01: 3 / 7 10: 7 / 17 11: 13 / 25
1	R/W	0	**FIFO Clear (FIFOCLR)** Writing a "1" to this bit clears FIFO. This bit is then cleared to "0" automatically.
0	R/W	0	**RESET (RESET)** The function of this bit is software reset. Writing a "1" to this bit resets the registers of C0R, C0STCR, C0IER, C0IIR, C0CFR, C0TCR, C0TFSR and C0RFSR. This bit is then cleared to "0" automatically.

7.17.4.3 CIR Interrupt Enable Register (C0IER)

The C0IER, an 8-bit register, is used to enable the CIR interrupt request.

Address Offset: 02h

Bit	R/W	Default	Description
7	R/W	0	**Interrupt Enable Function Control (IEC)** This bit is used to control the interrupt enabled function. Set this bit to "1" to enable the interrupt request for CIR. Set this bit to "0" to disable the interrupt request for CIR.
6 - 3	-	-	**Reserved**
2	R/W	0	**Receiver FIFO Overrun Interrupt Enable (RFOIE)** This bit is used to control Receiver FIFO Overrun Interrupt request. Set this bit to "1" to enable Receiver FIFO Overrun Interrupt request. Set this bit to "0" to disable Receiver FIFO Overrun Interrupt request.
1	R/W	0	**Receiver Data Available Interrupt Enable (RDAIE)** This bit is used to enable Receiver Data Available Interrupt request. The Receiver will generate this interrupt when the data available in FIFO exceeds FIFO Threshold Level. Set this bit to "1" to enable Receiver Data Available Interrupt request. Set this bit to "0" to disable Receiver Data Available Interrupt request.
0	R/W	0	**Transmitter Low Data Level Interrupt Enable (TLDLIE)** This bit is used to enable Transmitter Low Data Level Interrupt request. The Transmitter will generate this interrupt when the data available in FIFO is less than the FIFO threshold Level. Set this bit to "1" to enable Transmitter Low Data Level Interrupt request. Set this bit to "0" to disable Transmitter Low Data Level Interrupt request.

7.17.4.4 CIR Interrupt Identification Register (C0IIR)

The C0IIR, an 8-bit register, is used to identify the pending interrupt.

Address Offset: 03h

Bit	R/W	Default	Description
7	RO	1	**No Interrupt Pending (NIP)** This bit will be set to "1" if no interrupt is pending.
6 - 3	-	-	**Reserved**
2	RO	0	**Receiver FIFO Overrun Interrupt (RFOI)** This bit will be set to "1" if receiver FIFO overruns.
1	RO	0	**Receiver Data Available Interrupt (RDAI)** This bit will be set to "1" when the data available in the receiver FIFO exceeds the FIFO Threshold Level.
0	RO	0	**Transmitter Low Data Level Interrupt (TLDLI)** This bit will be set to "1" when the data available in the transmitter FIFO is less than the FIFO threshold Level.

7.17.4.5 CIR Carrier Frequency Register (C0CFR)

The CxCFR, an 8-bit register, is used to determine the carrier frequency.

Address Offset: 04h

Bit	R/W	Default	Description
7-6	-	-	**Reserved**
5	R/W	0	**High-Speed Carrier Frequency Select (HCFS)** This bit is used to select whether the Carrier Frequency is at a high speed or low speed. 0: 30-58 KHz (Default) 1: 400-500 KHz
4-0	R/W	01011	**Carrier Frequency (CFQ[4:0])** These five bits are used to determine the modulation carrier frequency. See Table 7-26.

Table 7-26. Modulation Carrier Frequency

CFQ	Low Frequency (HCFS =0)	High Frequency (HCFS = 1)
00000	27 KHz	-
00001	28 KHz	-
00010	29 KHz	-
00011	30 KHz	400 KHz
00100	31 KHz	-
00101	32 KHz	-
00110	33 KHz	-
00111	34 KHz	-
01000	35 KHz	450 KHz
01001	36 KHz	-
01010	37 KHz	-
01011	**38 KHz (default)**	**480 KHz (default)**
01100	39 KHz	-
01101	40 KHz	500 KHz
01110	41 KHz	-
01111	42 KHz	-
10000	43 KHz	-
10001	44 KHz	-
10010	45 KHz	-
10011	46 KHz	-
10100	47 KHz	-
10101	48 KHz	-
10110	49 KHz	-
10111	50 KHz	-
11000	51 KHz	-
11001	52 KHz	-
11010	53 KHz	-
11011	54 KHz	-
11100	55 KHz	-
11101	56 KHz	-
11110	57 KHz	-
11111	58 KHz	-

7.17.4.6 CIR Receiver Control Register (C0RCR)

The C0RCR, an 8-bit register, is used to control the CIR Receiver.

Address Offset: 05h

Bit	R/W	Default	Description
7	R/W	0	**Receiver Enable (RXEN)** This bit is used to enable the Receiver function. Set this bit to "1" to enable the Receiver function. Set this bit to "0" to disable the Receiver function. When the Receiver function is enabled, RXACT will be active if the selected carrier frequency is received.
6	-	-	**Reserved**
5	R/W	0	**Receiver Data Without Sync. (RDWOS)** This bit is used to control the sync. logic for Receiving data. Set this bit to "1" to obtain the receiving data without sync. logic. Set this bit to "0" to obtain the receiving data in sync. logic.
4	R/W	0	**Receiver Demodulation Enable (RXEND)** This bit is used to control the Receiver Demodulation logic. Set this bit to "1" to enable the Receiver Demodulation logic. Set this bit to "0" to disable the Receiver Demodulation logic. Set this bit to "1" to the Receiver device to demodulate the correct carrier.
3	R/WC	0	**Receiver Active (RXACT)** This bit is used to control the Receiver operation. This bit is set to "0" when the Receiver is inactive. This bit is set to "1" when the Receiver detects a pulse (RXEND=0) or pulse-train (RXEND=1) with the correct carrier frequency. The Receiver then starts to sample the input data when Receiver Active is set. Writing a "1" to this bit to clear the Receiver Active condition and make the Receiver enter an inactive mode.
2-0	R/W	001	**Receiver Demodulation Carrier Range (RXDCR[2:0])** These three bits are used to set the tolerance of the Receiver Demodulation carrier frequency. See Table 7-27 and Table 7-28.

Table 7-27. Receiver Demodulation Low Frequency (HCFS = 0)

RXDCR	001		010		011		100		101		110		
CFQ	min.	max.	min.	max.	Min.	max.	min.	Max.	min.	max.	min.	max.	(Hz)
00001	26.25	29.75	24.5	31.5	22.75	33.25	21	35	19.25	36.75	17.5	38.5	28K
00010	27.19	30.81	25.38	32.63	23.56	34.44	21.75	36.25	19.94	38.06	18.13	39.88	29K
00011	28.13	31.88	26.25	33.75	24.38	35.63	22.5	37.5	20.63	39.38	18.75	41.25	30K
00100	29.06	32.94	27.13	34.88	25.19	36.81	23.25	38.75	21.31	40.69	19.38	42.63	31K
00101	30	34	28	36	26	38	24	40	22	42	20	44	32K
00110	30.94	35.06	28.88	37.13	26.81	39.19	24.75	41.25	22.69	43.31	20.63	45.38	33K
00111	31.88	36.13	29.75	38.25	27.63	40.38	25.5	42.5	23.38	44.63	21.25	46.75	34K
01000	32.81	37.19	30.63	39.38	28.44	41.56	26.25	43.75	24.06	45.94	21.88	48.13	35K
01001	33.75	38.25	31.5	40.5	29.25	42.75	27	45	24.75	47.25	22.5	49.5	36K
01010	34.69	39.31	32.38	41.63	30.06	43.94	27.75	46.25	25.44	48.56	23.13	50.88	37K
01011	**35.63**	**40.38**	**33.25**	**42.75**	**30.88**	**45.13**	**28.5**	**47.5**	**26.13**	**49.88**	**23.75**	**52.25**	**38K**
01100	36.56	41.44	34.13	43.88	31.69	46.31	29.25	48.75	26.81	51.19	24.38	53.63	39K
01101	37.5	42.5	35	45	32.5	47.5	30	50	27.5	52.5	25	55	40K
01110	38.44	43.56	35.88	46.13	33.31	48.69	30.75	51.25	28.19	53.81	25.63	56.38	41K
01111	39.38	44.63	36.75	47.25	34.13	49.88	31.5	52.5	28.88	55.13	26.25	57.75	42K
10000	40.31	45.69	37.63	48.38	34.94	51.06	32.25	53.75	29.56	56.44	26.88	59.13	43K
10001	41.25	46.75	38.5	49.5	35.75	52.25	33	55	30.25	57.75	27.5	60.5	44K
10010	42.19	47.81	39.38	50.63	36.56	53.44	33.75	56.25	30.94	59.06	28.13	61.88	45K
10011	43.13	48.88	40.25	51.75	37.38	54.63	34.5	57.5	31.63	60.38	28.75	63.25	46K
10100	44.06	49.94	41.13	52.88	38.19	55.81	35.25	58.75	32.31	61.69	29.38	64.63	47K
10101	45	51	42	54	39	57	36	60	33	63	30	66	48K
10110	45.94	52.06	42.88	55.13	39.81	58.19	36.75	61.25	33.69	64.31	30.63	67.38	49K
10111	46.88	53.13	43.75	56.25	40.63	59.38	37.5	62.5	34.38	65.63	31.25	68.75	50K
11000	47.81	54.19	44.63	57.38	41.44	60.56	38.25	63.75	35.06	66.94	31.88	70.13	51K
11001	49.18	54.55	46.88	57.69	44.78	61.22	42.86	65.22	41.1	69.77	39.47	75	52K
11010	49.69	56.31	46.38	59.63	43.06	62.94	39.75	66.25	36.44	69.56	33.13	72.88	53K
11011	50.63	57.38	47.25	60.75	43.88	64.13	40.5	67.5	37.13	70.88	33.75	74.25	54K
11100	51.56	58.44	48.13	61.88	44.69	65.31	41.25	68.75	37.81	72.19	34.38	75.63	55K
11101	52.5	59.5	49	63	45.5	66.5	42	70	38.5	73.5	35	77	56K
11110	53.44	60.56	49.88	64.13	46.31	67.69	42.75	71.25	39.19	74.81	35.63	78.38	57K

Table 7-28. Receiver Demodulation High Frequency (HCFS = 1)

RXDCR	001		010		011		100		101		110		
CFQ	Min.	Max.	Min.	Max.	Min.	Max.	Min.	Max.	Min.	Max.	Min.	Max.	(KHz)
00011	375	425	350	450	325	475	300	500	275	525	250	550	400K
01000	421.9	478.1	393.8	506.3	365.6	534.4	337.5	562.5	309.4	590.6	281.3	618.8	450K
01011	450	510	420	540	390	570	360	600	330	630	300	660	**480K**
01011	468.8	531.3	437.5	562.5	406.3	593.8	375	625	343.8	656.3	312.5	687.5	500K

7.17.4.7 CIR Transmitter Control Register (C0TCR)

The C0TCR, an 8-bit register, is used to control the Transmitter.

Address Offset: 06h

Bit	R/W	Default	Description
7	-	-	**Reserved**
6	R/W	0	**Transmitter Run Length Enable (TXRLE)** This bit controls the Transmitter Run Length encoding/decoding mode, which condenses a series of "1" or "0" into one byte according to the value stored in bit 7 and the value stored in bits 6-0 minus 1. If this bit is set to "1", the Transmitter Run Length mode is enabled. If this bit is set to "0", the Transmitter Run Length mode is disabled.
5	R/W	0	**Transmitter Deferral (TXENDF)** This bit is used to avoid the Transmitter underrun condition. When this bit is set to "1", the Transmitter FIFO data will be kept until the transmitter time-out condition occurs or when FIFO is full.
4 - 3	R/W	00	**Transmitter Modulation Pulse Mode (TXMPM[1:0])** These two bits are used to define the Transmitter modulation pulse mode.
			TXMPM[1:0] — **Modulation Pulse Mode** 00 — C_pls mode (Default) Pulses are generated continuously for the entire logic 0 bit time. 01 — 8_pls mode 8 pulses are generated for each logic 0 bit. 10 — 6_pls mode 6 pulses are generated for each logic 0 bit. 11 — Reserved
2-0	R/W	100	**Transmitter Modulation Pulse Width (TXMPW[2:0])** These three bits are used to set Transmitter Modulation Pulse Width. The duty cycle of the carrier will be determined according to the settings of Carrier Frequency and the selection of Transmitter Modulation Pulse Width.

TXMPW[2:0]	HCFS= 0	HCFS= 1	
000	Reserved	Reserved	
001	Reserved	Reserved	
010	6 μs	0.7 μs	
011	7 μs	0.8 μs	
100	**8.7 μs**	**0.9 μs (Default)**	
101	10.6 μs	1.0 μs	
110	13.3 μs	1.16 μs	
111	Reserved	Reserved	

7.17.4.8 CIR Slow Clock Control Register (C0SCK)

The C0SCK, an 8-bit register, is used to select the slow clock source of 32.768k or 1.8432M Hz for operating with low power and can wake up EC from the Sleep mode.

In the Sleep mode, CIR only can receive serial data up to 2K Hz when
1. C0BDLR = 01h (max baud rate = 32.768k/16)
2. C0BDHR = 00h
3. SCKS = 1b
4. demodulation must be disabled.

Note: prior to set up Wakeup code and receive enable before enter Sleep mode (set SCKS bit in C0SCK register). If firmware needs to compare received data stored in the C0DR register with Wakeup code(written into C0WCR previously), SCKS has to be set to zero beforehand after Wakeup code has received completely.

Address Offset: 07h

Bit	R/W	Default	Description
7	R	1	**DLL Lock (DLLOCK)** This bit is available when DLL1P8E = 1. 1: 1.8432M Hz DLL in the locked state 0: 1.8432M Hz DLL in the unlocked state
6-4	R/W	0	**Baud Rate Count Mode (BRCM)** These three bits are used to select the baud rate counter number. They only need to be set when demodulation is disabled and SCKS = 1, DLL1P8E =0. Bits 6-4 baud counter 000 16 (488us) 001 14 (427us) 010 15 (457us) 011 18 (549us)
3	R/W	0	**DLL Test Enable (DLLTE)** 1: Set DLL to the test mode. 0: DLL in the normal mode
2	R/W	0	**DLL 1.8432M Enable (DLL1P8E)** 1: DLL 1.8432M Hz Enabled 0: DLL 1.8432M Hz Disabled The slow clock selects 32.768k Hz when this bit is set 0 and SCKS =1. The slow clock selects 1.8432M Hz when this bit is set 1 and SCKS =1.
1	R/WC	0	**TXD Clock Gating (TXDCKG)** 1: CIR transmitter clock source gating 0: CIR transmitter clock source not gating
0	R/W	0	**Slow Clock Select (SCKS)** 1: Select the slow clock source (32.768k or DLL 1.8432M Hz) for cir receiver to receive serial data which is input to CRX when RXEND = 0, RDWOS =1, and RXEN = 1. 0: unselect slow clock as the receiver clock source.

7.17.4.9 CIR Baud Rate Divisor Low Byte Register (C0BDLR)

The C0BDLR, an 8-bit register, is used to program the CIR Baud Rate clock.

Address Offset: 08h

Bit	R/W	Default	Description
7-0	RW	00000000	**Baud Rate Divisor Low Byte (BRDL[7:0])** These bits are the low byte of the register and used to divide the Baud Rate clock.

7.17.4.10 CIR Baud Rate Divisor High Byte Register (C0BDHR)

The C0BDHR, an 8-bit register, is used to program the CIR Baud Rate clock.

Address Offset: 09h

Bit	R/W	Default	Description
7-0	RW	00000000	**Baud Rate Divisor High Byte (BRDH[7:0])** These bits are the high byte of the register and used to divide the Baud Rate clock.

Baud rate divisor = 115200/baud rate
Ex1: 2400bps ➔ 115200 /2400 = 48 ➔ 48(d) = 0030 (h)
C0BDHR = 00(h), C0BDLR = 30(h)
Ex2: bit width = 0.565 ms ➔ 1770 bps ➔ 115200/1770 = 65 (d) = 0041 (h)
C0BDHR = 00(h), B0BDLR = 0041(h)

7.17.4.11 CIR Transmitter FIFO Status Register (C0TFSR)

The C0TFSR, an 8-bit register, provides the status information of Transmitter FIFO.

Address Offset: 0Ah

Bit	R/W	Default	Description
7 - 6	-	-	**Reserved**
5 - 0	RO	000000	**Transmitter FIFO Byte Count (TXFBC[5:0])** Return the number of bytes left in Transmitter FIFO.

7.17.4.12 CIR Receiver FIFO Status Register (C0RFSR)

The C0RFSR, an 8-bit register, provides the status information of Receiver FIFO.

Address Offset: 0Bh

Bit	R/W	Default	Description
7	RO	0	**Receiver FIFO Time-out (RXFTO)** This bit will be set to "1" when the Receiver FIFO time-out condition occurs. The conditions required for the occurrence of Receiver FIFO time-out include the followings: a. At least one byte data queued in Received FIFO for more than 64 ms. b. The receiver has been inactive (RXACT=0) for over 64ms. c. More than 64 ms have elapsed since the last byte is read from Receiver FIFO by CPU.
6	-	-	**Reserved**
5-0	RO	000000	**Receiver FIFO Byte Count (RXFBC[5:0])** Return the number of bytes left in Receiver FIFO.

7.17.4.13 CIR Wakeup Code Length Register (C0WCL)

The C0WCL, an 8-bit register, keeps the value of the valid code length minus 1 in the power-switch-code area. The wakeup controller in CIR module compares the received code with the code saved in the power-switch-code area of wakeup controller C0WCL - 1 bytes.

Address Offset : 0Dh

Bit	R/W	Default	Description
7-6	-	00	**Reserved**
5-0	R/W	111111	**CIR Wakeup Code Length (WCL[5:0])** The value in this register is the valid code length minus 1. For instance, when C0WCL is equal to 0, the valid code length is 1.

7.17.4.14 CIR Wakeup Code Read/Write Register (C0WCR)

The C0WCR, an 8-bit register, is the read/write port for accessing 20 wakeup code bytes. These bytes are accessed sequentially according to the read counter or write counter.

Address Offset : 0Eh

Bit	R/W	Default	Description
7-0	R/W	0	**CIR Wakeup Code Read/Write Register (WCR[7:0])** A port is for accessing 20 wakeup code bytes.

7.17.4.15 CIR Wakeup Power Control/Status Register (C0WPS)

The C0WPS, an 8-bit register, is used to record the power-on source, and two control bits are used to reset the read or write counter for accessing 20 code bytes through C0WCR.

Address Offset : 0Fh

Bit	R/W	Default	Description
7-6	-	00	**Reserved**
5	R/W	0	**CIR Wakeup Code Writing Counter Resetting Bit (WCRST)** This bit is used to reset the writing counter to 1, and it is where the first byte saved in the power-switch-code area. After the counter is reset, this bit will be reset to 0.
4	R/W	0	**CIR Wakeup Code Reading Counter Resetting Bit (RCRST)** This bit is used to reset the reading counter to 1, and it is where the first byte is saved in the power-switch-code area.
3	-	00	**Reserved**
2	R/W	0	**CIR Power On/Off Interrupt Identification (CIRPOII)** This bit is set to denote that the CIR Power On/Off interrupt(INT15) event has occurred . Writing 0 clears this identification bit, and writing 0 is ignored.
1	R	0	**CIR Power On/Off Interrupt Status (CIRPOIS)** This bit is set to denote that the CIR Power On request event has been generated by the CIR Remote-Controller-pressed power on/off key. Setting 0 denotes that the CIR Power Off request event has been generated by the CIR Remote-Controller-pressed power on/off key.
0	R/W	0	**CIR Power On/Off Status Interrupt Enable (CIRPOSIE)** This bit is set to enable the CIR Power On/Off interrupt event(INT15), which is generated by the CIR Remote-Controller-pressed power on/off key. Setting 0 to disable interrupt by the Power on/off event.

7.18 Debugger (DBGR)

7.18.1 Overview

This EC side module provides three 18-bit 8032 ROM trigger addresses and issues an INT0# and EC Memory Snoop (ECMS).

7.18.2 Features

- 3 trigger addresses
- EC Memory Snoop (ECMS = I2EC + D2EC)

7.18.3 Functional Description

7.18.3.1 ROM Address Match Interrupt

The trigger address, where an instruction is constructed by one, two or three bytes, must be the first byte of each instruction.

INT0RM is set when the trigger address matches the 8032 program counter except that the trigger address is equal to zero.

If Parallel Port cable is detected by internal hardware strap, this function is disabled.

Note that DBGR module is clock-gated in default and cannot work until 0 is written to DBGRCG bit in the CGCTRL3R register.

7.18.3.2 EC Memory Snoop (ECMS)

ECMS is available through one of the two ways:

1. I2EC (I-bus to EC Memory)
Local machine snoops EC memory through the LPC I/O cycle.

2. D2EC (DBGR to EC Memory)
Remote machine snoops EC memory through EPP cycle.

I2EC/D2EC utility is provided by ITE.
I2EC is not enabled until its controlled register in the EC side register is written.
I2EC can be configured as read-only for all targets.
If D2EC is enabled by the utility, I2EC will be disabled until reset.
I2EC/D2EC will not affect any register content of read-clear registers.
The writing action of I2EC/D2EC to F/F based register is okay; however, the result of writing to non-F/F based register is not expected. Such registers may be write-clear, or writing to start internal state-machine, etc.

Table 7-29. I2EC/D2EC Accessible Targets

	I2EC	D2EC
uC SFR (except Acc reg.)	RO	RO
uC SFR - Acc reg.	RO	R/W
uC External Memory (except BRAM)	R/W controlled by I2ECCTRL field in SPCTRL1 reg.	R/W
uC External Memory - BRAM	Not Accessible	RO

7.18.4 EC Interface Registers

The following set of the registers is accessible only by the EC. They are listed below and the base address is 2500h.

Table 7-30. EC View Register Map, DBGR

7	0	Offset
Trigger 1 Address Low Byte Register (BKA1L)		10h
Trigger 1 Address Middle Byte Register (BKA1M)		11h
Trigger 1 Address High Byte Register (BKA1H)		12h
Trigger 2 Address Low Byte Register (BKA1L)		13h
Trigger 2 Address Middle Byte Register (BKA1M)		14h
Trigger 2 Address High Byte Register (BKA1H)		15h
Trigger 3 Address Low Byte Register (BKA1L)		16h
Trigger 3 Address Middle Byte Register (BKA1M)		17h
Trigger 3 Address High Byte Register (BKA1H)		18h

For a summary of the abbreviations used for the register type, see “Register Abbreviations and Access Rules”.

7.18.4.1 Trigger 1 Address Low Byte Register (BKA1L)

Address Offset: 10h

Bit	R/W	Default	Description
7-0	W	00h	**Trigger 1 Address (BK1A7-0)**

7.18.4.2 Trigger 1 Address Middle Byte Register (BKA1M)

Address Offset: 11h

Bit	R/W	Default	Description
7-0	W	00h	**Trigger 1 Address (BK1A15-8)**

7.18.4.3 Trigger 1 Address High Byte Register (BKA1H)

Address Offset: 12h

Bit	R/W	Default	Description
7-2	-	00h	**Reserved**
1-0	W	00b	**Trigger 1 Address (BK1A17-16)**

7.18.4.4 Trigger 2 Address Low Byte Register (BKA2L)

Address Offset: 13h

Bit	R/W	Default	Description
7-0	W	00h	**Trigger 2 Address (BK2A7-0)**

7.18.4.5 Trigger 2 Address Middle Byte Register (BKA2M)

Address Offset: 14h

Bit	R/W	Default	Description
7-0	W	00h	**Trigger 2 Address (BK2A15-8)**

7.18.4.6 Trigger 2 Address High Byte Register (BKA2H)

Address Offset: 15h

Bit	R/W	Default	Description
7-2	-	00h	**Reserved**
1-0	W	00b	**Trigger 2 Address (BK2A17-16)**

7.18.4.7 Trigger 3 Address Low Byte Register (BKA3L)

Address Offset: 16h

Bit	R/W	Default	Description
7-0	W	00h	**Trigger 3 Address (BK3A7-0)**

7.18.4.8 Trigger 3 Address Middle Byte Register (BKA3M)

Address Offset: 17h

Bit	R/W	Default	Description
7-0	W	00h	**Trigger 3 Address (BK3A15-8)**

7.18.4.9 Trigger 3 Address High Byte Register (BKA3H)

Address Offset: 18h

Bit	R/W	Default	Description
7-2	-	00h	**Reserved**
1-0	W	00b	**Trigger 3 Address (BK3A17-16)**

7.19 Parallel Port (PP)

7.19.1 Overview

IT8511 supports IEEE 1284 parallel port interface to allow in-system programming regardless of running firmware code.

7.19.2 Features

- ISP via parallel port interface on existed KBS connector
- Fast flash programming with software provided by ITE
- Programming software supports EPP/SPP mode

7.19.3 Functional Description

7.19.3.1 KBS Connection with Parallel Port Connector

Figure 7-34. Parallel Port Female 25-Pin Connector

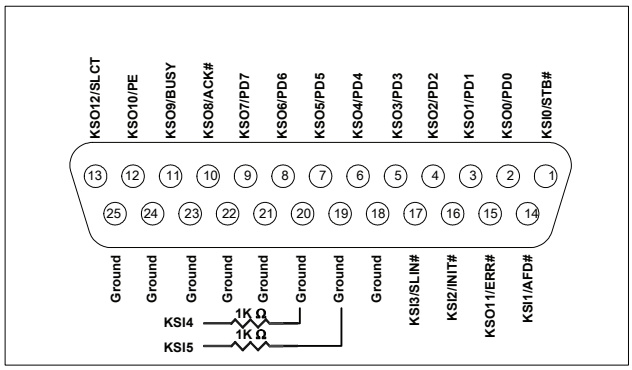

7.19.3.2 In-System Programming Operation

In-system programming takes place when VSTBY is supplied (other power is don't-care) and both EC chip and the flash are soldered on PCB. Parallel port interface occupies the same interface pins as KBS to use the existing KBS connector.

IT8511 enters in-system programming mode if it detects parallel port signals when VSTBY power on pulled high. It can be disabled by OVRPPK/OVRPPEN bit in the KSICTRLR register

If Parallel Port cable is detected by internal hardware strap, the following functions will be disabled.

1. ROM Address Match Interrupt
2. Internal/External Watchdog

8. Register List

Section	Register Name	Pge	Addr
6.2.2	**Super I/O Configuration Registers**	**41**	
6.2.2.1	Logical Device Number (LDN)	41	07h
6.2.2.2	Chip ID Byte 1 (CHIPID1)	41	20h
6.2.2.3	Chip ID Byte 2 (CHIPID2)	41	21h
6.2.2.4	Chip Version (CHIPVER)	41	22h
6.2.2.5	Super I/O Control Register (SIOCTRL)	42	23h
6.2.2.6	Super I/O IRQ Configuration Register (SIOIRQ)	42	25h
6.2.2.7	Super I/O General Purpose Register (SIOGP)	42	26h
6.2.2.8	Super I/O Power Mode Register (SIOPWR)	43	2Dh
6.2.4	**System Wake-Up Control (SWUC) Configuration Registers**	**46**	
6.2.4.1	Logical Device Activate Register (LDA)	46	30h
6.2.4.2	I/O Port Base Address Bits [15:8] for Descriptor 0 (IOBAD0[15:8])	46	60h
6.2.4.3	I/O Port Base Address Bits [7:0] for Descriptor 0 (IOBAD0[7:0])	46	61h
6.2.4.4	I/O Port Base Address Bits [15:8] for Descriptor 1 (IOBAD1[15:8])	46	62h
6.2.4.5	I/O Port Base Address Bits [7:0] for Descriptor 1 (IOBAD1[7:0])	47	63h
6.2.4.6	Interrupt Request Number and Wake-Up on IRQ Enable (IRQNUMX)	47	70h
6.2.4.7	Interrupt Request Type Select (IRQTP)	47	71h
6.2.5	**KBC / Mouse Interface Configuration Registers**	**47**	
6.2.5.1	Logical Device Activate Register (LDA)	47	30h
6.2.5.2	I/O Port Base Address Bits [15:8] for Descriptor 0 (IOBAD0[15:8])	47	60h
6.2.5.3	I/O Port Base Address Bits [7:0] for Descriptor 0 (IOBAD0[7:0])	48	61h
6.2.5.4	I/O Port Base Address Bits [15:8] for Descriptor 1 (IOBAD1[15:8])	48	62h
6.2.5.5	I/O Port Base Address Bits [7:0] for Descriptor 1 (IOBAD1[7:0])	48	63h
6.2.5.6	Interrupt Request Number and Wake-Up on IRQ Enable (IRQNUMX)	48	70h
6.2.5.7	Interrupt Request Type Select (IRQTP)	48	71h
6.2.6	**KBC / Keyboard Interface Configuration Registers**	**48**	
6.2.6.1	Logical Device Activate Register (LDA)	49	30h
6.2.6.2	I/O Port Base Address Bits [15:8] for Descriptor 0 (IOBAD0[15:8])	49	60h
6.2.6.3	I/O Port Base Address Bits [7:0] for Descriptor 0 (IOBAD0[7:0])	49	61h
6.2.6.4	I/O Port Base Address Bits [15:8] for Descriptor 1 (IOBAD1[15:8])	49	62h
6.2.6.5	I/O Port Base Address Bits [7:0] for Descriptor 1 (IOBAD1[7:0])	49	63h
6.2.6.6	Interrupt Request Number and Wake-Up on IRQ Enable (IRQNUMX)	49	70h
6.2.6.7	Interrupt Request Type Select (IRQTP)	49	71h
6.2.7	**Shared Memory/Flash Interface (SMFI) Configuration Registers**	**50**	
6.2.7.1	Logical Device Activate Register (LDA)	50	30h
6.2.7.2	I/O Port Base Address Bits [15:8] for Descriptor 0 (IOBAD0[15:8])	50	60h
6.2.7.3	I/O Port Base Address Bits [7:0] for Descriptor 0 (IOBAD0[7:0])	50	61h
6.2.7.4	I/O Port Base Address Bits [15:8] for Descriptor 1 (IOBAD1[15:8])	50	62h
6.2.7.5	I/O Port Base Address Bits [7:0] for Descriptor 1 (IOBAD1[7:0])	51	63h
6.2.7.6	Interrupt Request Number and Wake-Up on IRQ Enable (IRQNUMX)	51	70h
6.2.7.7	Interrupt Request Type Select (IRQTP)	51	71h
6.2.7.8	Shared Memory Configuration Register (SHMC)	51	F4h

6.2.8	**BRAMLD Configuration Registers**	**52**	
6.2.8.1	Logical Device Activate Register (LDA)	52	30h
6.2.8.2	I/O Port Base Address Bits [15:8] for Descriptor 0 (IOBAD0[15:8])	52	60h
6.2.8.3	I/O Port Base Address Bits [7:0] for Descriptor 0 (IOBAD0[7:0])	52	61h
6.2.8.4	I/O Port Base Address Bits [15:8] for Descriptor 1 (IOBAD1[15:8])	52	62h
6.2.8.5	I/O Port Base Address Bits [7:0] for Descriptor 1 (IOBAD1[7:0])	53	63h
6.2.8.6	Interrupt Request Number and Wake-Up on IRQ Enable (IRQNUMX)	53	70h
6.2.8.7	Interrupt Request Type Select (IRQTP)	53	71h
6.2.8.8	P80L Begin Index (P80LB)	53	F3h
6.2.8.9	P80L End Index (P80LE)	53	F4h
6.2.8.10	P80L Current Index (P80LC)	53	F5h

6.2.9	**Power Management I/F Channel 1 Configuration Registers**	**54**	
6.2.9.1	Logical Device Activate Register (LDA)	54	30h
6.2.9.2	I/O Port Base Address Bits [15:8] for Descriptor 0 (IOBAD0[15:8])	54	60h
6.2.9.3	I/O Port Base Address Bits [7:0] for Descriptor 0 (IOBAD0[7:0])	54	61h
6.2.9.4	I/O Port Base Address Bits [15:8] for Descriptor 1 (IOBAD1[15:8])	54	62h
6.2.9.5	I/O Port Base Address Bits [7:0] for Descriptor 1 (IOBAD1[7:0])	55	63h
6.2.9.6	Interrupt Request Number and Wake-Up on IRQ Enable (IRQNUMX)	55	70h
6.2.9.7	Interrupt Request Type Select (IRQTP)	55	71h

6.2.10	**Power Management I/F Channel 2 Configuration Registers**	**55**	
6.2.10.1	Logical Device Activate Register (LDA)	55	30h
6.2.10.2	I/O Port Base Address Bits [15:8] for Descriptor 0 (IOBAD0[15:8])	56	60h
6.2.10.3	I/O Port Base Address Bits [7:0] for Descriptor 0 (IOBAD0[7:0])	56	61h
6.2.10.4	I/O Port Base Address Bits [15:8] for Descriptor 1 (IOBAD1[15:8])	56	62h
6.2.10.5	I/O Port Base Address Bits [7:0] for Descriptor 1 (IOBAD1[7:0])	56	63h
6.2.10.6	I/O Port Base Address Bits [15:8] for Descriptor 2 (IOBAD2[15:8])	56	64h
6.2.10.7	I/O Port Base Address Bits [7:0] for Descriptor 2 (IOBAD2[7:0])	56	65h
6.2.10.8	Interrupt Request Number and Wake-Up on IRQ Enable (IRQNUMX)	57	70h
6.2.10.9	Interrupt Request Type Select (IRQTP)	57	71h

6.3	**Shared Memory Flash Interface Bridge (SMFI)**	**60**	
6.3.4	EC Interface Registers	66	
6.3.4.1	FBIU Configuration Register (FBCFG)	68	1000h
6.3.4.2	Flash Programming Configuration Register (FPCFG)	69	1001h
6.3.4.3	Flash EC Code Banking Select Register (FECBSR)	70	1005h
6.3.4.4	Flash Memory Size Select Register (FMSSR)	71	1007h
6.3.4.5	Shared Memory EC Control and Status Register (SMECCS)	72	1020h
6.3.4.6	Shared Memory Host Semaphore Register (SMHSR)	73	1022h
6.3.4.7	Shared Memory EC Override Read Protect Registers 0-1 (SMECORPR0-1)	73	1023h/1024h
6.3.4.8	Shared Memory EC Override Write Protect Registers 0-1 (SMECOWPR0-1)	73	1029h/102Ah
6.3.4.9	FWH Flash ID Register (FWHFIDR)	74	1030h
6.3.4.10	Flash Control 1 Register (FLHCTRL1R)	74	1031h
6.3.4.11	Flash Control 2 Register (FLHCTRL2R)	75	1032h
6.3.4.11	Flash Control 2 Register (FLHCTRL2R)	75	1032h
6.3.4.12	uC Control Register (UCCTRLR)	75	1034h
6.3.4.13	Host Control 2 Register (HCTRL2R)	75	1036h
6.3.4.14	Trusted ROM Register (TROMR)	76	1037h
6.3.4.15	EC-Indirect Memory Address Register 0 (ECINDAR0)	76	103Bh
6.3.4.16	EC-Indirect Memory Address Register 1 (ECINDAR1)	76	103Ch
6.3.4.17	EC-Indirect Memory Address Register 2 (ECINDAR2)	76	103Dh

6.3.4.18	EC-Indirect Memory Address Register 3 (ECINDAR3)	76	103Eh
6.3.4.19	EC-Indirect Memory Data Register (ECINDDR)	77	103Fh
6.3.4.20	Scratch SRAM 0 Address Low Byte Register (SCAR0L)	77	1040h
6.3.4.21	Scratch SRAM 0 Address Middle Byte Register (SCAR0M)	77	1041h
6.3.4.22	Scratch SRAM 0 Address High Byte Register (SCAR0H)	77	1042h
6.3.4.23	Scratch SRAM 1 Address Low Byte Register (SCAR1L)	77	1043h
6.3.4.24	Scratch SRAM 1 Address Middle Byte Register (SCAR1M)	77	1044h
6.3.4.25	Scratch SRAM 1 Address High Byte Register (SCAR1H)	78	1045h
6.3.4.26	Scratch SRAM 2 Address Low Byte Register (SCAR2L)	78	1046h
6.3.4.27	Scratch SRAM 2 Address Middle Byte Register (SCAR2M)	78	1047h
6.3.4.28	Scratch SRAM 2 Address High Byte Register (SCAR2H)	78	1048h
6.3.4.29	Scratch SRAM 3 Address Low Byte Register (SCAR3L)	78	1049h
6.3.4.30	Scratch SRAM 3 Address Middle Byte Register (SCAR3M)	78	104Ah
6.3.4.31	Scratch SRAM 3 Address High Byte Register (SCAR3H)	79	104Bh
6.3.4.32	Scratch SRAM 4 Address Low Byte Register (SCAR4L)	79	104Ch
6.3.4.33	Scratch SRAM 4 Address Middle Byte Register (SCAR4M)	79	104Dh
6.3.4.34	Scratch SRAM 4 Address High Byte Register (SCAR4H)	79	104Eh
6.3.5	Host Interface Registers	80	
6.3.5.1	Shared Memory Indirect Memory Address Register 0 (SMIMAR0)	80	00h
6.3.5.2	Shared Memory Indirect Memory Address Register 1 (SMIMAR1)	80	01h
6.3.5.3	Shared Memory Indirect Memory Address Register 2 (SMIMAR2)	80	02h
6.3.5.4	Shared Memory Indirect Memory Address Register 3 (SMIMAR3)	80	03h
6.3.5.5	Shared Memory Indirect Memory Data Register (SMIMDR)	80	04h
6.3.5.6	Shared Memory Host Semaphore Register (SMHSR)	81	0Ch
6.3.5.7	M-Bus Control Register (MBCTRL)	81	0Fh

7.2	**Interrupt Controller (INTC)**	**154**	
7.2.4	EC Interface Registers	155	
7.2.4.1	Interrupt Status Register 0 (ISR0)	156	1100h
7.2.4.2	Interrupt Status Register 1 (ISR1)	156	1101h
7.2.4.3	Interrupt Status Register 2 (ISR2)	157	1102h
7.2.4.4	Interrupt Status Register 3 (ISR3)	157	1103h
7.2.4.5	Interrupt Enable Register 0 (IER0)	158	1104h
7.2.4.6	Interrupt Enable Register 1 (IER1)	158	1105h
7.2.4.7	Interrupt Enable Register 2 (IER2)	158	1106h
7.2.4.8	Interrupt Enable Register 3 (IER3)	158	1107h
7.2.4.9	Interrupt Edge/Level-Triggered Mode Register 0 (IELMR0)	158	1108h
7.2.4.10	Interrupt Edge/Level-Triggered Mode Register 1 (IELMR1)	159	1109h
7.2.4.11	Interrupt Edge/Level-Triggered Mode Register 2 (IELMR2)	159	110Ah
7.2.4.12	Interrupt Edge/Level-Triggered Mode Register 3 (IELMR3)	159	110Bh
7.2.4.13	Interrupt Polarity Register 0 (IPOLR0)	159	110Ch
7.2.4.14	Interrupt Polarity Register 1 (IPOLR1)	160	110Dh
7.2.4.15	Interrupt Polarity Register 2 (IPOLR2)	160	110Eh
7.2.4.16	Interrupt Polarity Register 3 (IPOLR3)	160	110Fh
7.2.4.17	Interrupt Vector Register (IVCT)	160	1110h
7.2.4.18	8032 INT0# Status (INT0ST)	161	1111h
7.2.4.19	Power Fail Register (PFAILR)	161	1112h

7.12	**EC Access to Host Controlled Modules (EC2I Bridge)**	**246**	
7.12.4	EC Interface Registers	246	
7.12.4.1	Indirect Host I/O Address Register (IHIOA)	247	1200h
7.12.4.2	Indirect Host Data Register (IHD)	247	1201h
7.12.4.3	Lock Super I/O Host Access Register (LSIOHA)	247	1202h
7.12.4.4	Super I/O Access Lock Violation Register (SIOLV)	248	1203h

7.12.4.5	EC to I-Bus Modules Access Enable Register (IBMAE)	248	1204h
7.12.4.6	I-Bus Control Register (IBCTL)	248	1205h
6.5	**Keyboard Controller (KBC)**	**96**	
6.5.4	Host Interface Registers	97	
6.5.4.1	KBC Data Input Register (KBDIR)	98	PnP
6.5.4.2	KBC Data Output Register (KBDOR)	98	PnP
6.5.4.3	KBC Command Register (KBCMDR)	98	PnP
6.5.4.4	KBC Status Register (KBSTR)	98	PnP
6.5.5	EC Interface Registers	99	
6.5.5.1	KBC Host Interface Control Register (KBHICR)	99	1300h
6.5.5.2	KBC Interrupt Control Register (KBIRQR)	100	1302h
6.5.5.3	KBC Host Interface Keyboard/Mouse Status Register (KBHISR)	101	1304h
6.5.5.4	KBC Host Interface Keyboard Data Output Register (KBHIKDOR)	101	1306h
6.5.5.5	KBC Host Interface Mouse Data Output Register (KBHIMDOR)	101	1308h
6.5.5.6	KBC Host Interface Keyboard/Mouse Data Input Register (KBHIDIR)	102	130Ah
6.4	**System Wake-Up Control (SWUC)**	**83**	
6.4.4	Host Interface Registers	86	
6.4.4.1	Wake-Up Event Status Register (WKSTR)	87	00h
6.4.4.2	Wake-Up Event Enable Register (WKER)	88	02h
6.4.4.3	Wake-Up Signals Monitor Register (WKSMR)	88	06h
6.4.4.4	Wake-Up ACPI Status Register (WKACPIR)	89	07h
6.4.4.5	Wake-Up SMI Enable Register (WKSMIER)	89	13h
6.4.4.6	Wake-Up IRQ Enable Register (WKIRQER)	90	15h
6.4.5	EC Interface Registers	90	
6.4.5.1	SWUC Control Status 1 Register (SWCTL1)	91	1400h
6.4.5.2	SWUC Control Status 2 Register (SWCTL2)	92	1402h
6.4.5.3	SWUC Control Status 3 Register (SWCTL3)	92	1404h
6.4.5.4	SWUC Host Configuration Base Address Low Byte Register (SWCBALR)	92	1408h
6.4.5.5	SWUC Host Configuration Base Address High Byte Register (SWCBAHR)	93	140Ah
6.4.5.6	SWUC Interrupt Enable Register (SWCIER)	93	140Ch
6.4.5.7	SWUC Host Event Status Register (SWCHSTR)	94	140Eh
6.4.5.8	SWUC Host Event Interrupt Enable Register (SWCHIER)	95	1410h
6.6	**Power Management Channel (PMC)**	**103**	
6.6.4	Host Interface Registers	107	
6.6.4.1	PMC Data Input Register (PMDIR)	107	PnP
6.6.4.2	PMC Data Output Register (PMDOR)	108	PnP
6.6.4.3	PMC Command Register (PMCMDR)	108	PnP
6.6.4.4	Status Register (PMSTR)	108	PnP
6.6.5	EC Interface Registers	109	
6.6.5.1	PM Status Register (PMSTS)	110	1500h/10h
6.6.5.2	PM Data Out Port (PMDO)	110	1501h/11h
6.6.5.3	PM Data Out Port with SCI (PMDOSCI)	110	1502h/12h
6.6.5.4	PM Data Out Port with SMI (PMDOSMI)	111	1503h/13h
6.6.5.5	PM Data In Port (PMDI)	111	1504h/14h
6.6.5.6	PM Data In Port with SCI (PMDISCI)	111	1505h/15h
6.6.5.7	PM Control (PMCTL)	112	1506h/16h
6.6.5.8	PM Interrupt Control (PMIC)	113	1507h/17h
6.6.5.9	PM Interrupt Enable (PMIE)	114	1508h/18h
6.6.5.10	PM Interrupt Enable (PMIE)	114	1519h

6.6.5.11	16-byte PMC2EX Mailbox 0-15 (MBXEC0-15)	114	15F0h-FFh
7.5	**General Purpose I/O Port (GPIO)**	**173**	
7.5.3	EC Interface Registers	173	
7.5.3.1	General Control Register (GCR)	174	1600h
7.5.3.2	Port Data Registers A-J (GPDRA-GPDRJ)	174	1601h/160Ah
7.5.3.3	Port Data Mirror Registers A-J (GPDMRA-GPDMRJ)	174	1661h/166Ah
7.5.3.4	Port Control n Registers (GPCRn, n = A0-I7)	175	1610h/165Dh
7.5.3.5	Output Type Registers H (GPOTH)	176	1678h
7.8	**PS/2 Interface**	**199**	
7.8.4	EC Interface Registers	200	
7.8.4.1	PS/2 Control Register 1-3 (PSCTL1-3)	201	1700h-1702h
7.8.4.2	PS/2 Interrupt Control Register 1-3 (PSINT1-3)	201	1704h-1706h
7.8.4.3	PS/2 Status Register 1-3 (PSSTS1-3)	202	1708h-170Ah
7.8.4.4	PS/2 Data Register 1-3 (PSDAT1-3)	202	170Ch-170Eh
7.11	**PWM and SmartAuto Fan Control (PWM)**	**221**	
7.11.4	EC Interface Registers	228	
7.11.4.1	Channel 0 Clock Prescaler Register (C0CPRS)	229	1800h
7.11.4.2	Cycle Time Register (CTR)	229	1801h
7.11.4.3	PWM Duty Cycle Register 0 to 7(DCRi)	229	1802h-1809h
7.11.4.4	PWM Polarity Register (PWMPOL)	229	180Ah
7.11.4.5	Prescaler Clock Frequency Select Register (PCFSR)	230	180Bh
7.11.4.6	Prescaler Clock Source Select Group Low (PCSSGL)	231	180Ch
7.11.4.7	Prescaler Clock Source Select Group High (PCSSGH)	231	180Dh
7.11.4.8	CR256 Prescaler Clock Source Select Group (CR256PCSSG)	232	180Eh
7.11.4.9	Prescaler Clock Source Gating Register (PCSGR)	232	180Fh
7.11.4.10	Fan 1 Configuration Register (FAN1CNF)	233	1810h
7.11.4.11	Fan 2 Configuration Register (FAN2CNF)	234	1811h
7.11.4.12	SmartAuto Fan Minimum-region Speed Range Register (AFMISRR)	234	1812h
7.11.4.13	SmartAuto Fan Maximum-region Speed Range Register (AFMASRR)	235	1813h
7.11.4.14	Min/Off PWM Limit Register (MOPL)	236	1814h
7.11.4.15	Fan 1 Minimum PWM Duty Cycle Register (F1MPDCR)	236	1815h
7.11.4.16	Fan 2 Minimum PWM Duty Cycle Register (F2MPDCR)	236	1816h
7.11.4.17	Fan 1 Temperature LIMIT Register (F1TLIMITR)	237	1817h
7.11.4.18	Fan 2 Temperature LIMIT Register (F2TLIMITR)	237	1818h
7.11.4.19	Fan 1 Absolute Temperature LIMIT Register (F1ATLIMITR)	237	1819h
7.11.4.20	Fan 2 Absolute Temperature LIMIT Register (F2ATLIMITR)	238	181Ah
7.11.4.21	Zone Hysteresis Register (ZHYSR)	238	181Bh
7.11.4.22	Fan 1 Temperature Record Register (F1TRR)	238	181Ch
7.11.4.23	Fan 2 Temperature Record Register (F2TRR)	239	181Dh
7.11.4.24	Fan 1 Tachometer LSB Reading Register (F1TLRR)	239	181Eh
7.11.4.25	Fan 1 Tachometer MSB Reading Register (F1TMRR)	239	181Fh
7.11.4.26	Fan 2 Tachometer LSB Reading Register (F2TLRR)	239	1820h
7.11.4.27	Fan 2 Tachometer MSB Reading Register (F2TMRR)	239	1821h
7.11.4.28	Zone Interrupt Status Control Register (ZINTSCR)	240	1822h
7.11.4.29	Zone Temperature Interrupt Enable Register (ZTIER)	240	1823h
7.11.4.30	Channel 4 Clock Prescaler Register (C4CPRS)	241	1827h
7.11.4.31	Channel 4 Clock Prescaler MSB Register (C4MCPRS)	241	1828h
7.11.4.32	Channel 6 Clock Prescaler Register (C6CPRS)	241	182Bh
7.11.4.33	Channel 6 Clock Prescaler MSB Register (C6MCPRS)	241	182Ch
7.11.4.34	Channel 7 Clock Prescaler Register (C7CPRS)	242	182Dh

7.11.4.35	Channel 7 Clock Prescaler MSB Register (C7MCPRS)	242	182Eh
7.11.4.36	Fan 1 Temperature Criterion Register 1-3 (F1TC1-3)	242	1830h-1832h
7.11.4.37	Fan 2 Temperature Criterion Register 1-3(F2TC1-3)	243	1834h-1836h
7.11.4.38	Fan 1 PWM Duty Cycle Criterion Register 1-3(F1PDC1-3)	243	1838h-183Ah
7.11.4.39	Fan 2 PWM Duty Cycle Criterion Register 1-3(F2PDC1-3)	243	183Ch-183Eh

7.10	**Analog to Digital Converter (ADC)**	**206**	
7.10.4	EC Interface Registers	209	
7.10.4.1	ADC Status Register (ADCSTS)	210	1900h
7.10.4.2	ADC Configuration Register (ADCCFG)	211	1901h
7.10.4.3	ADC Clock Control Register (ADCCTL)	211	1902h
7.10.4.4	Voltage Channel 0 Control Register (VCH0CTL)	212	1904h
7.10.4.5	Calibration Data Control Register (KDCTL)	213	1905h
7.10.4.6	Voltage Channel 1 Control Register (VCH1CTL)	214	1906h
7.10.4.7	Volt Channel 1 Data Buffer LSB (VCH1DATL)	214	1907h
7.10.4.8	Volt Channel 1 Data Buffer MSB (VCH1DATM)	214	1908h
7.10.4.9	Voltage Channel 2 Control Register (VCH2CTL)	215	1909h
7.10.4.10	Volt Channel 2 Data Buffer LSB (VCH2DATL)	215	190Ah
7.10.4.11	Volt Channel 2 Data Buffer MSB (VCH2DATM)	215	190Bh
7.10.4.12	Voltage Channel 3 Control Register (VCHN3CTL)	215	190Ch
7.10.4.13	Volt Channel 3 Data Buffer LSB (VCH3DATL)	215	190Dh
7.10.4.14	Volt Channel 3 Data Buffer MSB (VCH3DATM)	216	190Eh
7.10.4.15	Volt High Scale Calibration Data Buffer LSB (VHSCDBL)	216	1914h
7.10.4.16	Volt High Scale Calibration Data Buffer MSB (VHSCDBM)	216	1915h
7.10.4.17	Voltage Channel 0 Data Buffer LSB (VCH0DATL)	216	1918h
7.10.4.18	Voltage Channel 0 Data Buffer MSB (VCH0DATM)	217	1919h
7.10.4.19	Volt High Scale Gain-Error Calibration Data Buffer LSB (VHSGCDBL)	217	191Ch
7.10.4.20	Volt High Scale Gain-Error Calibration Data Buffer MSB (VHSGCDBM)	217	191Dh

7.9	**Digital To Analog Converter (DAC)**	**203**	
7.9.4	EC Interface Registers	203	
7.9.4.1	DAC Enable Register (DACENREG)	204	1A00h
7.9.4.2	DAC Power Down Register (DACPDREG)	205	1A01h
7.9.4.3	DAC Data Channel 0~5 Register (DACDAT0~5)	205	1A02h-1A07h

7.3	**Wake-Up Control (WUC)**	**165**	
7.3.4	EC Interface Registers	165	
7.3.4.1	Wake-Up Edge Mode Register (WUEMR1)	165	1B00h
7.3.4.2	Wake-Up Edge Mode Register (WUEMR2)	166	1B01h
7.3.4.3	Wake-Up Edge Mode Register (WUEMR3)	166	1B02h
7.3.4.4	Wake-Up Edge Mode Register (WUEMR4)	166	1B03h
7.3.4.5	Wake-Up Edge Sense Register (WUESR1)	166	1B04h
7.3.4.6	Wake-Up Edge Sense Register (WUESR2)	167	1B05h
7.3.4.7	Wake-Up Edge Sense Register (WUESR3)	167	1B06h
7.3.4.8	Wake-Up Edge Sense Register (WUESR4)	167	1B07h
7.3.4.9	Wake-Up Enable Register (WUENR1)	168	1B08h
7.3.4.10	Wake-Up Enable Register (WUENR2)	168	1B09h
7.3.4.11	Wake-Up Enable Register (WUENR3)	168	1B0Ah
7.3.4.12	Wake-Up Enable Register (WUENR4)	168	1B0Bh

7.7	**SM Bus Interface (SMB)**	**187**

7.7.4	EC Interface Registers	192	
7.7.4.1	Host Status Register (HOSTA)	193	1C00h/1C11h 1C29h
7.7.4.2	Host Control Register (HOCTL)	194	1C01h/1C12h 1C2Ah
7.7.4.3	Host Command Register (HOCMD)	194	1C02h/1C13h 1C2Bh
7.7.4.4	Transmit Slave Address Register (TRASLA)	195	1C03h/1C14h 1C2Ch
7.7.4.5	Data 0 Register (D0REG)	195	1C04h/1C15h 1C2Dh
7.7.4.6	Data 1 Register (D1REG)	195	1C05h/1C16h 1C2Eh
7.7.4.7	Host Block Data Byte Register (HOBDB)	195	1C06h/1C17h 1C2Fh
7.7.4.8	Packet Error Check Register (PECERC)	196	1C07h/1C18h 1C30h
7.7.4.9	SMBUS Pin Control Register (SMBPCTL)	196	1C0Ah/1C1Bh 1C31h
7.7.4.10	Host Control Register 2 (HOCTL2)	196	1C10h/1C21h 1C32h
7.7.4.11	4.7 μs Low Register (4P7USL)	197	1C22h
7.7.4.12	4.0 μs Low Register (4P0USL)	197	1C23h
7.7.4.13	300 ns Register (300NSREG)	197	1C24h
7.7.4.14	250 ns Register (250NSREG)	197	1C25h
7.7.4.15	25 ms Register (25MSREG)	198	1C26h
7.7.4.16	45.3 μs Low Register (45P3USLREG)	198	1C27h
7.7.4.17	45.3 μs High Register (45P3USHREG)	198	1C28h
7.7.4.18	4.7 μs And 4.0 μs High Register (4p7A4P0H)	198	1C33h

7.4	**Keyboard Matrix Scan Controller**	**171**	
7.4.3	EC Interface Registers	171	
7.4.3.1	Keyboard Scan Out Low Byte Data Register (KSOL)	171	1D00h
7.4.3.2	Keyboard Scan Out High Byte Data 1 Register (KSOH1)	171	1D01h
7.4.3.3	Keyboard Scan Out Control Register (KSOCTRL)	172	1D02h
7.4.3.4	Keyboard Scan Out High Byte Data 2 Register (KSOH2)	172	1D03h
7.4.3.5	Keyboard Scan In Data Register (KSIR)	172	1D04h
7.4.3.6	Keyboard Scan In Control Register (KSICTRLR)	172	1D05h

7.6	**EC Clock and Power Management Controller (ECPM)**	**182**	
7.6.3	EC Interface Registers	182	
7.6.3.1	Clock Gating Control 1 Register (CGCTRL1R)	183	1E01h
7.6.3.2	Clock Gating Control 2 Register (CGCTRL2R)	184	1E02h
7.6.3.3	Clock Gating Control 3 Register (CGCTRL3R)	184	1E05h
7.6.3.4	PLL Control (PLLCTRL)	185	1E03h
7.6.3.5	Auto Clock Gating (AUTOCG)	185	1E04h
7.6.3.6	PLL Frequency (PLLFREQR)	186	1E06h

7.13	**External Timer and External Watchdog (ETWD)**	**251**	
7.13.4	EC Interface Registers	252	
7.13.4.1	External Timer/WDT Configuration Register (ETWCFG)	253	1F01h
7.13.4.2	External Timer Prescaler Register (ETPSR)	253	1F02h

7.13.4.3	External Timer Counter High Byte (ETCNTLHR)	253 1F03h
7.13.4.4	External Timer Counter Low Byte (ETCNTLLR)	254 1F04h
7.13.4.5	External Timer/WDT Control Register (ETWCTRL)	254 1F05h
7.13.4.6	External WDT Counter High Byte (EWDCNTLHR)	254 1F09h
7.13.4.7	External WDT Low Counter (EWDCNTLLR)	254 1F06h
7.13.4.8	External WDT Key Register (EWDKEYR)	254 1F07h
7.14	**General Control (GCTRL)**	**255**
7.14.4	EC Interface Registers	255
7.14.4.1	Chip ID Byte 1 (ECHIPID1)	256 2000h
7.14.4.2	Chip ID Byte 2 (ECHIPID2)	256 2001h
7.14.4.3	Chip Version (ECHIPVER)	256 2002h
7.14.4.4	Identify Input Register (IDR)	256 2004h
7.14.4.5	Reset Status (RSTS)	257 2006h
7.14.4.6	Reset Control 1 (RSTC1)	258 2007h
7.14.4.7	Reset Control 2 (RSTC2)	258 2008h
7.14.4.8	Reset Control 3 (RSTC3)	258 2009h
7.14.4.9	Base Address Select (BADRSEL)	259 200Ah
7.14.4.10	Wait Next Clock Rising (WNCKR)	259 200Bh
7.14.4.11	Oscillator Control Register (OSCTRL)	259 200Ch
7.14.4.12	Special Control 1 (SPCTRL1)	260 200Dh
7.14.4.13	Reset Control Host Side (RSTCH)	260 200Eh
7.15	**External GPIO Controller (EGPC)**	**261**
7.15.4	EC Interface Registers	261
7.15.4.1	External GPIO Address Register (EADDR)	262 2100h
7.15.4.2	External GPIO Data Register (EDAT).	262 2101h
7.15.4.3	External GPIO Control Register (ECNT).	262 2102h
7.15.4.4	External GPIO Status Register (ESTS).	263 2103h
7.16	**Battery-backed SRAM (BRAM)**	**264**
7.16.4	EC Interface Registers	265
7.16.4.1	SRAM Byte n Registers (SBTn, n= 0-63)	265 2280h-22BFh
7.17	**Consumer IR (CIR)**	**266**
7.17.4	EC Interface Registers	268
7.17.4.1	CIR Data Register (C0DR)	268 2300h
7.17.4.2	CIR Master Control Register (C0MSTCR)	269 2301h
7.17.4.3	CIR Interrupt Enable Register (C0IER)	270 2302h
7.17.4.4	CIR Interrupt Identification Register (C0IIR)	270 2303h
7.17.4.5	CIR Carrier Frequency Register (C0CFR)	271 2304h
7.17.4.6	CIR Receiver Control Register (C0RCR)	273 2305h
7.17.4.7	CIR Transmitter Control Register (C0TCR)	276 2306h
7.17.4.8	CIR Slow Clock Control Register (C0SCK)	277 2307h
7.17.4.9	CIR Baud Rate Divisor Low Byte Register (C0BDLR)	278 2308h
7.17.4.10	CIR Baud Rate Divisor High Byte Register (C0BDHR)	278 2309h
7.17.4.11	CIR Transmitter FIFO Status Register (C0TFSR)	278 230Ah
7.17.4.12	CIR Receiver FIFO Status Register (C0RFSR)	279 230Bh
7.17.4.13	CIR Wakeup Code Length Register (C0WCL)	279 230Dh
7.17.4.14	CIR Wakeup Code Read/Write Register (C0WCR)	279 230Eh
7.17.4.15	CIR Wakeup Power Control/Status Register (C0WPS)	280 230Fh

6.7	**Trusted Mobile KBC (TMKBC)**	**115**
6.7.4	Host Interface Registers	115
6.7.4.1	TMKBC Vendor ID Register (TVENDID)	115 01h-00h
6.7.4.2	TMKBC Device ID Register (TDEVID)	116 03h-02h
6.7.4.3	TMKBC Version Register (TVER)	116 05h-04h
6.7.4.4	Generic Capabilities Reporting Register (CAP)	116 06h
6.7.4.5	TMKBC Revision ID Register (TREVID)	116 07h
6.7.4.6	Configuration Register (CNF)	117 09h-08h
6.7.4.7	Control Register (CNT)	117 0Bh-0Ah
6.7.4.8	IRQ Capabilities Reporting Register (IRQCAP)	118 0Dh-oCh
6.7.4.9	Status Register (STS)	118 11h-10h
6.7.4.10	Extended Status Register (EXTSTS)	119 13h
6.7.4.11	Interrupt Trigger Enable Register (INTTRIG)	119 17h
6.7.4.12	TMKBC Data Input Register (TDATIN)	119 1Bh-18h
6.7.4.13	TMKBC Data Output Register (TDATOUT)	119 23h-20h
6.7.5	EC Interface Registers	120
6.7.5.1	EC Side Configuration Register (ECCON)	120 2400h
6.7.5.2	Status Control Register (STSCON)	121 2401h
6.7.5.3	EC Data Input Register (EDATIN)	121 2402h
6.7.5.4	EC Data Output Register (EDATOUT)	121 2403h
6.7.5.5	EC Buffer Status Register (EBUFSTS)	121 2404h
6.7.5.6	EC Status Register (ESTS)	122 2405h
6.7.5.7	EC Vendor ID Low Register (EVENL)	122 2406h
6.7.5.8	EC Vendor ID High Register (EVENH)	122 2407h
6.7.5.9	EC Device ID Low Register (EDEVL)	122 2408h
6.7.5.10	EC Device ID High Register (EDEVH)	122 2409h
6.7.5.11	EC Version Low Register (EVERL)	123 240Ah
6.7.5.12	EC Version High Register (EVERH)	123 240Bh
6.7.5.13	EC Revision ID Register (EREVID)	123 240Ch

7.18	**Debugger (DBGR)**	**281**
7.18.4	EC Interface Registers	282
7.18.4.1	Trigger 1 Address Low Byte Register (BKA1L)	282 2510h
7.18.4.2	Trigger 1 Address Middle Byte Register (BKA1M)	282 2511h
7.18.4.3	Trigger 1 Address High Byte Register (BKA1H)	282 2512h
7.18.4.4	Trigger 2 Address Low Byte Register (BKA2L)	282 2513h
7.18.4.5	Trigger 2 Address Middle Byte Register (BKA2M)	282 2514h
7.18.4.6	Trigger 2 Address High Byte Register (BKA2H)	283 2515h
7.18.4.7	Trigger 3 Address Low Byte Register (BKA3L)	283 2516h
7.18.4.8	Trigger 3 Address Middle Byte Register (BKA3M)	283 2517h
7.18.4.9	Trigger 3 Address High Byte Register (BKA3H)	283 2518h

7.1.9	**EC Internal Register Description**	**139**
7.1.9.1	Port 0 Register (P0R)	139 80h
7.1.9.2	Stack Pointer Register (SPR)	139 81h
7.1.9.3	Data Pointer Low Register (DPLR)	139 82h
7.1.9.4	Data Pointer High Register (DPHR)	140 83h
7.1.9.5	Data Pointer 1 Low Register (DP1LR)	140 84h
7.1.9.6	Data Pointer 1 High Register (DP1HR)	140 85h
7.1.9.7	Data Pointer Select Register (DPSR)	140 86h
7.1.9.8	Power Control Register (PCON)	140 87h
7.1.9.9	Timer Control Register (TCON)	141 88h

7.1.9.10	Timer Mode Register (TMOD)	142 89h
7.1.9.11	Timer 0 Low Byte Register (TL0R)	142 8Ah
7.1.9.12	Timer 1 Low Byte Register (TL1R)	142 8Bh
7.1.9.13	Timer 0 High Byte Register (TH0R)	142 8Ch
7.1.9.14	Timer 1 Low Byte Register (TH1R)	143 8Dh
7.1.9.15	Clock Control Register (CKCON)	143 8Eh
7.1.9.16	Port 1 Register (P1R)	143 90h
7.1.9.17	Serial Port Control Register (SCON)	144 98h
7.1.9.18	Serial Port Buffer Register (SBUFR)	144 99h
7.1.9.19	Port 2 Register (P2R)	144 A0h
7.1.9.20	Interrupt Enable Register (IE)	145 A8h
7.1.9.21	Port 3 Register (P3R)	145 B0h
7.1.9.22	Interrupt Priority Register (IP)	145 B8h
7.1.9.23	Status Register (STATUS)	146 C5h
7.1.9.24	Timer 2 Control Register (T2CON)	146 C8h
7.1.9.25	Timer Mode Register (T2MOD)	147 C9h
7.1.9.26	Timer 2 Capture Low Byte Register (RCAP2LR)	147 CAh
7.1.9.27	Timer 2 Capture High Byte Register (RCAP2HR)	147 CBh
7.1.9.28	Timer 2 Low Byte Register (TL2R)	147 CCh
7.1.9.29	Timer 2 High Byte Register (TH2R)	147 CDh
7.1.9.30	Program Status Word Register (PSW)	148 D0h
7.1.9.31	Watch Dog Timer Control Register (WDTCON)	148 D8h
7.1.9.32	Accumulator Register (ACC)	148 E0h
7.1.9.33	B Register (BR)	149 F0h
7.1.9.34	Manual Prefetch Register (MPREFC)	149 F7h

9. DC Characteristics

(VSTBY, VCC =3.3V±0.3V, AVCC =3.3V±0.15V, VBAT = 2.3~3.3V, Ta=0°C to 70°C)

Absolute Maximum Ratings*

Applied Voltage of VSTBY, VCC, AVCC, VBAT……..... 0.3V to +3.6V

Input Voltage of 3.3V Interface..... -0.3V to VCC +0.3V

Tcase..... 0°C to +70°C

Storage Temperature .....-40°C to +125°C

***Comments**

Stresses above those listed under "Absolute Maximum Ratings" may cause permanent damage to this device. These are stress ratings only. Functional operation of this device at these or any other conditions above those indicated in the operational sections of this specification is not implied, and exposure to absolute maximum rating conditions for extended periods may affect device reliability.

DC Electrical Characteristics (Ta=0°C to 70°C)

Symbol	Parameter	Min.	Typ.	Max.	Conditions
3.3V CMOS Interface					
V_{IL}	Input Low Voltage	-0.3V	—	VCC x 0.3	VCC=3.0 - 3.6V
V_{IH}	Input High Voltage	VCC x 0.7	—	VCC+ 0.3V	VCC=3.0 - 3.6V
V_{IH}	Input High Voltage (5V tolerant pad)	VCC x 0.7	—	6.3V	VCC=3.0 - 3.6V
V_{OL}	Output Low Voltage	—	—	0.4	I_{OL}= -2, -4, -6, -8mA
V_{OH}	Output High Voltage	2.4	—	—	I_{OH}= 2, 4, 6, 8mA
V_{T-}	Schmitt Trigger Negative Going Threshold Voltage	0.9	1.2	—	
V_{T+}	Schmitt Trigger Positive Going Threshold Voltage	—	2.1	2.5	
I_{IL}	Input leakage Current	-10μA	±1μA	10μA	no pull-up or pull-down
I_{OZ}	Tri-state Leakage Current	-10μA	±1μA	10μA	no pull-up or pull-down
R_{pu}	Input Pull-Up Resistance	40KΩ	75KΩ	190KΩ	V_I= 0V
R_{pd}	Input Pull-Down resistance	40KΩ	75KΩ	190KΩ	V_I= VCC
Cin	Input Capacitance	—	2.8pF	—	
Cout	Output Capacitance	2.7pF	—	4.9pF	
Cbld	Bi-directional Buffer	2.7pF	—	4.9pF	

Table 9-1. Power Consumption

Symbol	Parameter	Min.	Typ.	Max.	Conditions
3.3V CMOS Interface					
I_{SLEEP}	VSTBY supply current	—	100 μA	—	Internal pull are disabled VIL = GND VIH = VSTBY No load
I_{BAT}	VBAT supply current	—	2.2 μA	2.4μA	VSTBY and VCC are not supplied

10. AC Characteristics

Figure 10-1. VSTBY Power-on Reset Timing

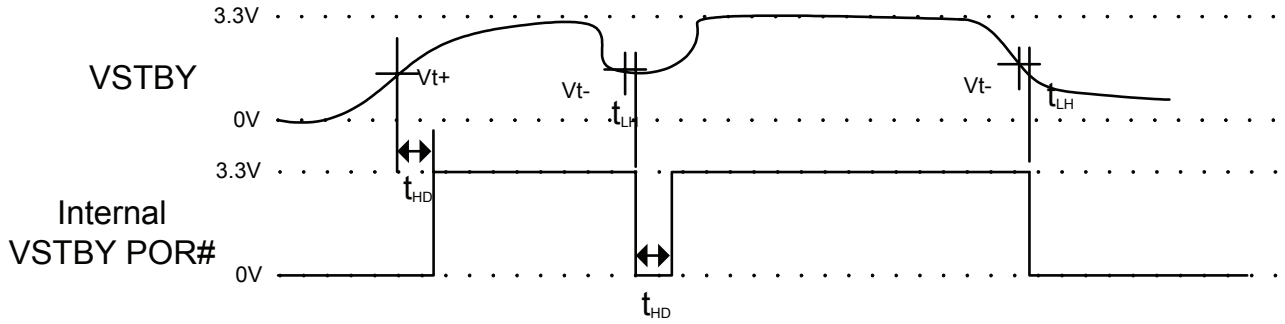

Table 10-1. VSTBY Power-on Reset AC Table

Symbol	Parameter	Min.	Typ.	Max.	Unit
Vt+	Level Detection Positive Going Threshold Voltage	—	2.89	—	V
Vt-	Level Detection Negative Going Threshold Voltage	—	2.65	—	V
t_{HD}	Internal VSTBY POR Going High Delay	—	500	—	μs
t_{LH}	Minimum Hold Time after VSTBY < Vt- and before Internal VSTBY POR Going Low	—	10	—	μs

Figure 10-2. Reset Timing

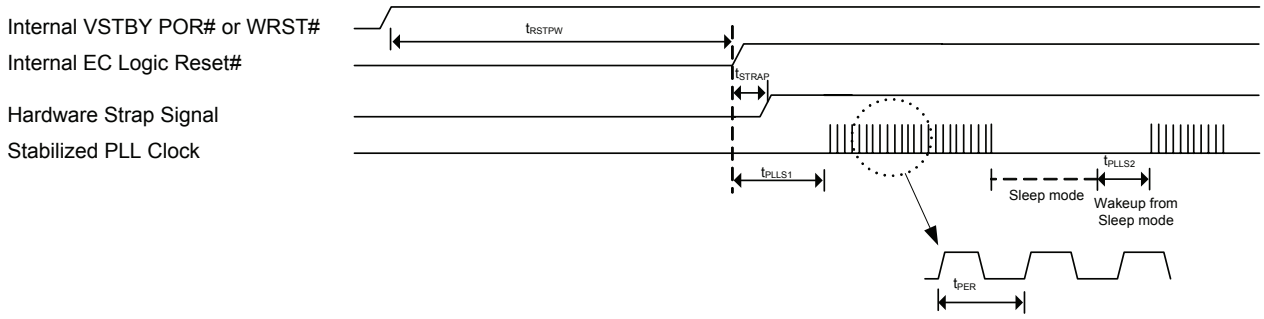

Table 10-2. Reset AC Table

Symbol	Parameter	Min.	Typ.	Max.	Unit
t_{RSTPW}	Internal EC logic reset after VSTBY POR or WRST#	—	1650	—	Tick (by 32.768 KHz)
t_{STRAP}	Strap sampling time	0	—	—	ns
t_{PLLS1}	PLL stabilization time hardware	—	5	—	ms
t_{PLLS2}	PLL stabilization time after waking up from Sleep mode	—	5	—	ms
t_{PER}	PLL clock period	—	$1/_{FreqPLL}$	—	ns
FreqPLL	PLL clock frequency if PLLFREQ = 0011b	—	32.3	—	MHz
	PLL clock frequency if PLLFREQ = 0111b	—	64.5	—	MHz
FreqEC	EC clock frequency if PLLFREQ = 0111b	—	9.2	—	MHz

Figure 10-3. Warm Reset Timing

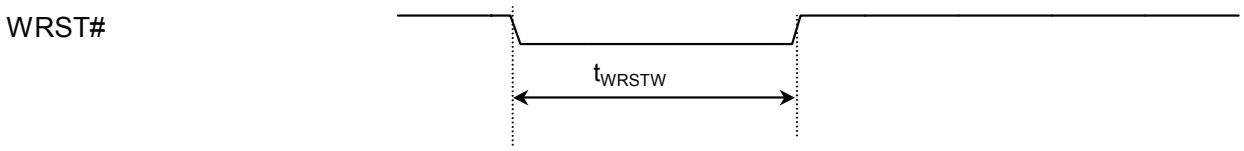

Table 10-3. Warm Reset AC Table

Symbol	Parameter	Min.	Typ.	Max.	Unit
t_{WRSTW}	Warm reset width	10	—	—	μs

Figure 10-4. Wakeup from Doze Mode Timing

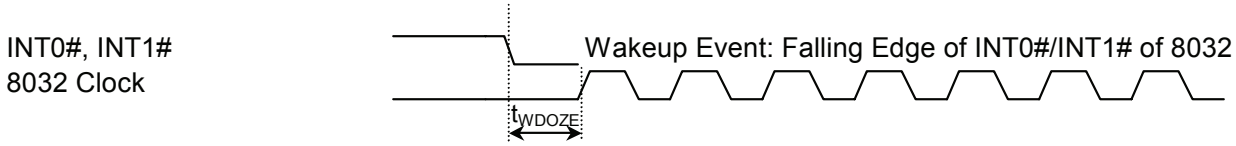

Table 10-4. Wakeup from Doze Mode AC Table

Symbol	Parameter	Min.	Typ.	Max.	Unit
t_{WDOZE}	Doze wakeup time from falling edge of INT0#/INT1# to rising edge of first 8032 clock.	—	—	2 / (EC Clock Freq)	—

Figure 10-5. Wake Up from Sleep Mode Timing

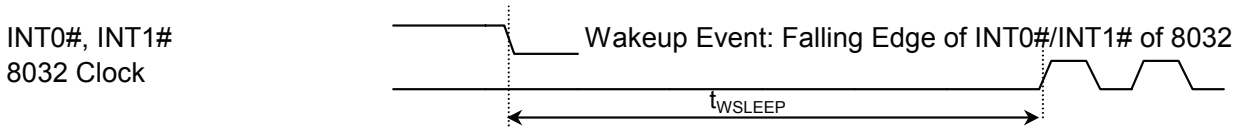

Table 10-5. Wake Up from Sleep Mode AC Table

Symbol	Parameter	Min.	Typ.	Max.	Unit
t_{WSLEEP}	Sleep wakeup time from falling edge of INT0#/INT1# to rising edge of first 8032 clock.	—	—	4.2	ms

Figure 10-6. Asynchronous External Wakeup/Interrupt Source Edge Detected Timing

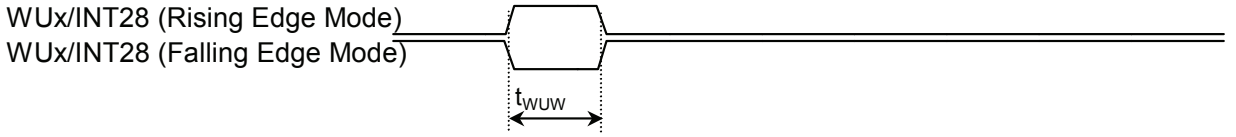

Table 10-6. Asynchronous External Wakeup/Interrupt Source Edge Detected AC Table

Symbol	Parameter	Min.	Typ.	Max.	Unit
t_{wuw}	Wakeup source pulse width	—	1	—	ns

Figure 10-7. LPC and SERIRQ Timing

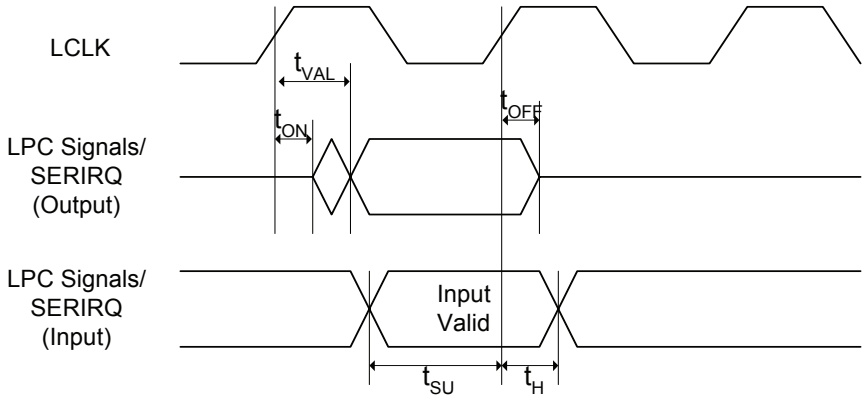

Table 10-7. LPC and SERIRQ AC Table

Symbol	Parameter	Min.	Typ.	Max.	Unit
t_{ON}	Float to Active Delay	3	—	—	ns
t_{VAL}	Output Valid Delay	—	—	12	ns
t_{OFF}	Active to Float Delay	—	—	20	ns
t_{SU}	Input Setup Time	7	—	—	ns
t_H	Input Hold Time	0	—	—	ns

Figure 10-8. SWUC Wake Up Timing

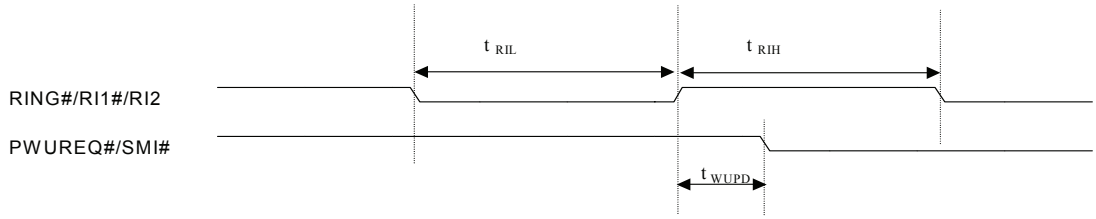

Table 10-8. SWUC Wake Up AC Table

Symbol	Parameter	Min.	Typ.	Max.	Unit
t_{RIL}	RING#, RI1# , RI2# Low Time	10	—	—	ns
t_{RIh}	RING#, RI1# , RI2# High Time	10	—	—	ns
t_{WUPD}	Wake Up propagation delay time	—	20	—	ns

Figure 10-9. LPC/FWH Flash Cycle Timing

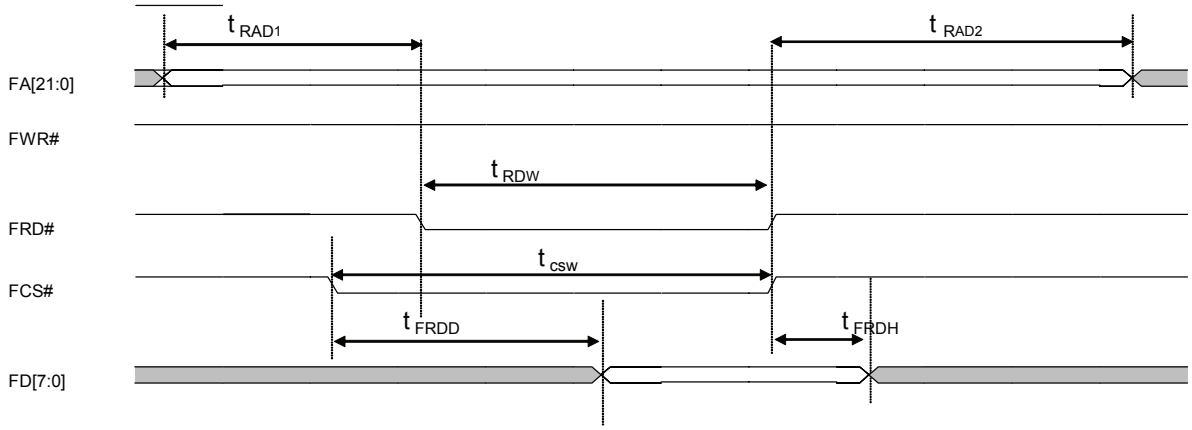

Table 10-9. LPC/FWH Flash Cycle AC Table

Symbol	Parameter	Min.	Typ.	Max.	Unit
t_{FLCLK}	FLCLK period	—	$1/_{FreqPLL}$	—	ns
t_{VAL}	Output valid delay	—	10	—	ns
t_S	Input setup time if LFSW1T = 1	7	—	—	ns
	Input setup time if LFSW1T = 0	20	—	—	ns
t_H	Input hold time	0	—	—	ns

Note 1: LFSW1T is LFSW1T field in the FLHCTRL1R register.

Figure 10-10. Serial Flash Cycle Timing

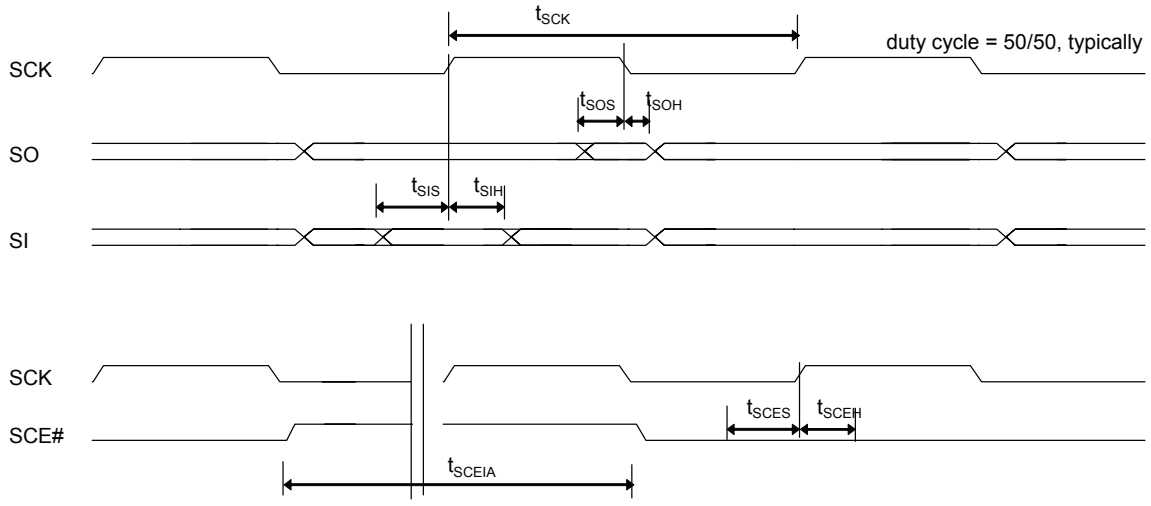

Table 10-10. Serial Flash Cycle AC Table

Symbol	Parameter	Min.	Typ.	Max.	Unit
t_{SCK}	SCK period	—	$1/_{FreqPLL}$	—	ns
t_{SOS}	SO setup time	3	—	—	ns
t_{SOH}	SO hold time	3	—	—	ns
t_{SIS}	SI setup time	3	—	—	ns
t_{SIH}	SI hold time	3	—	—	ns
t_{SCES}	SCE# setup time	3	—	—	ns
t_{SCEH}	SCE# hold time	3	—	—	ns
t_{SCEIA}	SCE# high time	(SCEMINHW + 1) * t_{SCK}	—	—	ns

Figure 10-11. PWM Output Timing

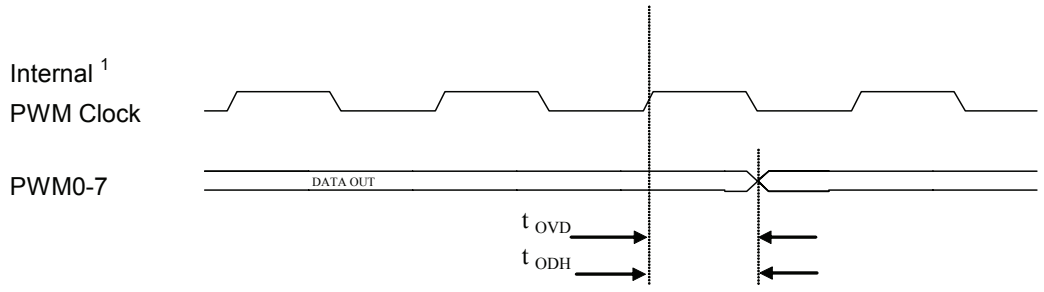

Table 10-11. PWM Output AC Table

Symbol	Parameter	Min.	Typ.	Max.	Unit
t_{OVD}	PWM output valid delay time	—	—	0.5	T^{NOTE1}
t_{ODH}	PWM output hold time	0	—	—	ns

Note 1: T is one time unit and its length is equal to the EC clock period X C0CPRS +1 (ns) for CH0~3, or X C4CPRS +1 (ns) for CH4~7.

Figure 10-12. PMC SMI#/SCI# Timing

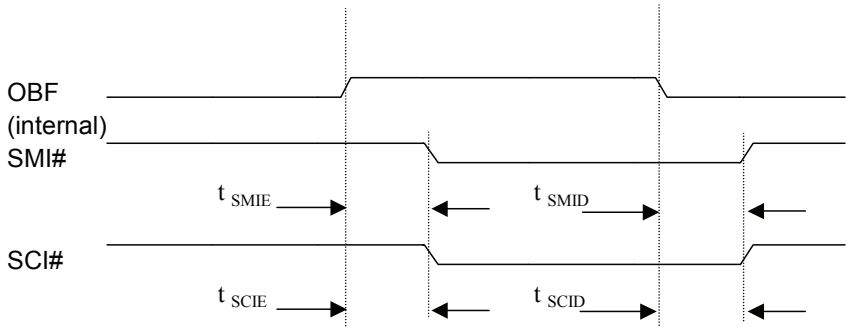

Table 10-12. PMC SMI#/SCI# AC Table

Symbol	Parameter	Min.	Typ.	Max.	Unit
t_{SMIE}	OBF asserted to SMI# asserted time	—	10	—	ns
t_{SMID}	OBF de-asserted to SMI# de-asserted time	—	5	—	ns
t_{SCIE}	OBF asserted to SCI# asserted time	—	10	—	ns
t_{SCID}	OBF de-asserted to SCI# de-asserted time	—	5	—	ns

Figure 10-13. PMC IBF/SCI# Timing

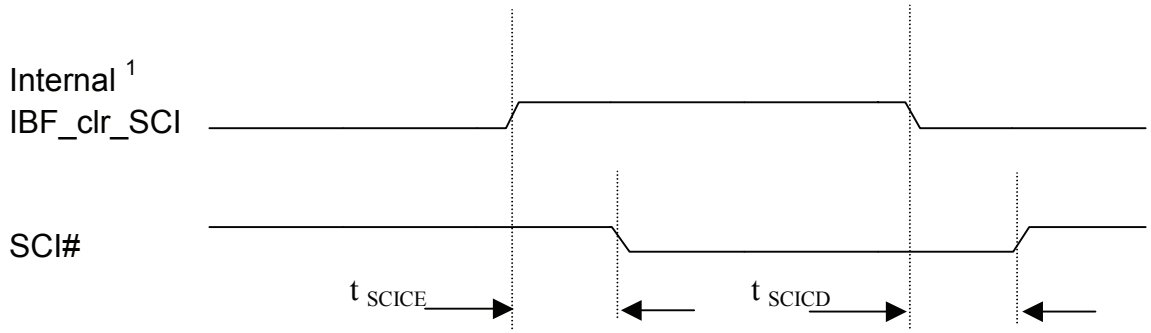

Table 10-13. PMC IBF/SCI# AC Table

Symbol	Parameter	Min.	Typ.	Max.	Unit
t_{SCICE}	IBF_clr_SCI asserted to SCI# asserted time	—	70	—	ns
t_{SCICD}	IBF_clr_SCI de-asserted to SCI# de-asserted time	—	40	—	ns

Note 1: IBF_clr_SCI means the invert signal of IBF, IBF_clr_SCI set to one when EC read PMDI or PMDISCI.

Figure 10-14. PS/2 Receive/Transmit Timing

Receive:

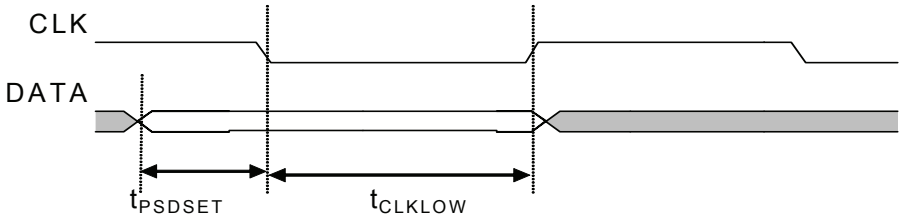

Transmit:

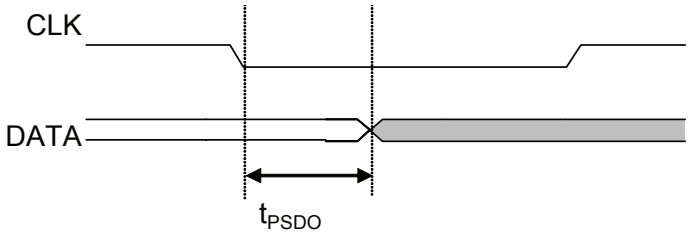

Table 10-14. PS/2 Receive/Transmit AC Table

Symbol	Parameter	Min.	Typ.	Max.	Unit
t_{PSDSET}	DATA line input set up time	1	—	—	ns
t_{CLKLOW}	CLK line low time	1	—	—	μs
t_{PSDO}	DATA line output data time	—	—	1	μs

Figure 10-15. SMBUS Timing

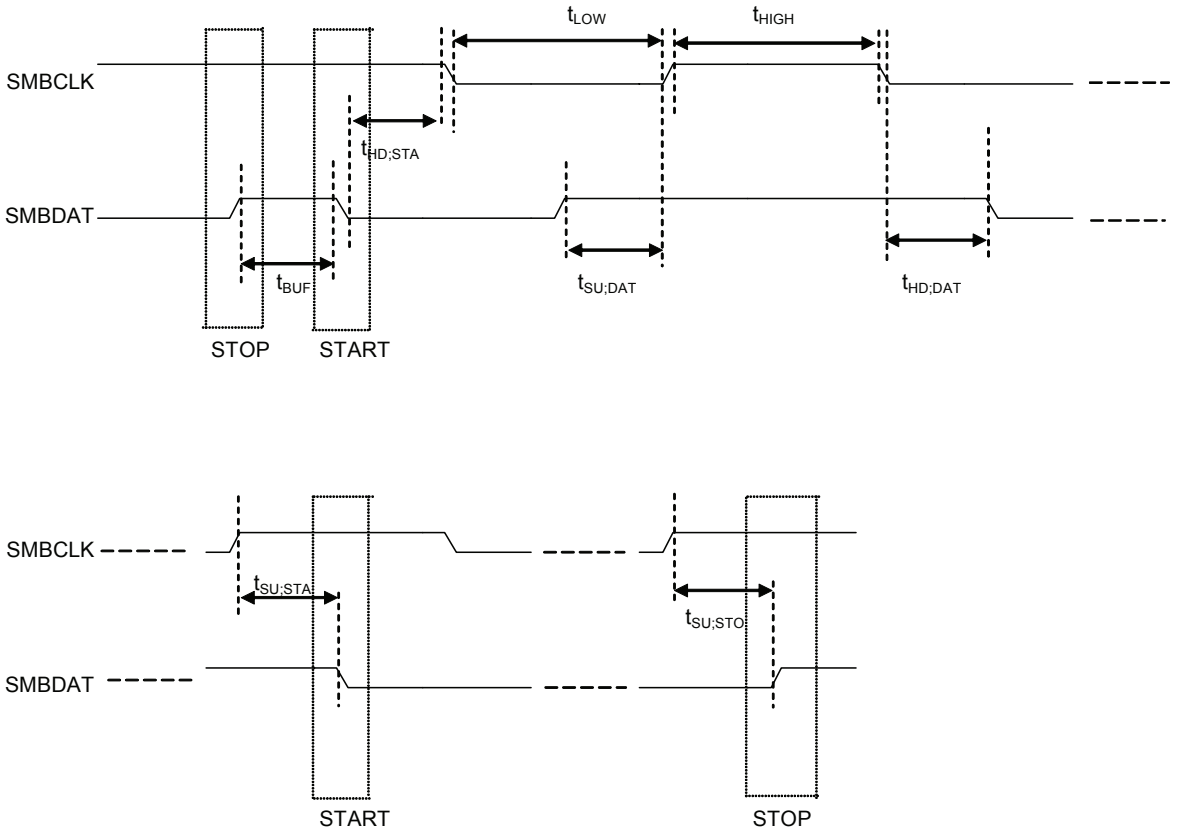

Table 10-15. SMBUS AC Table

Symbol	Parameter	Min.	Typ.	Max.	Unit
t_{BUF}	Bus free time between Stop and Start condition	4.7	—	—	µs
$t_{HD;STA}$	Hold time after (Repeated) Start condition. After this period, the first clock is generated.	4.0	—	—	µs
t_{LOW}	Clock low period	4.7	—	—	µs
t_{HIGH}	Clock high period	4.0	—	50	µs
$t_{SU;DAT}$	Data setup time	250	—	—	ns
$t_{HD;DAT}$	Data hold time	300	—	—	ns
$t_{SU;STA}$	Repeated Start condition setup time	4.7	—	—	µs
$t_{SU;STO}$	Stop condition setup time	4.0	—	—	µs

Figure 10-16. Consumer IR (CIR) Timing

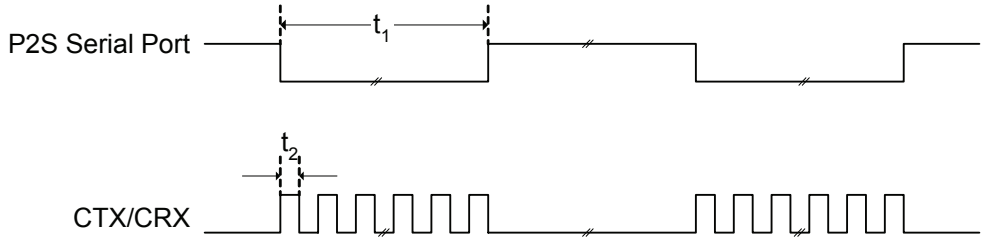

Table 10-16. Consumer IR (CIR) AC Table

Symbol	Parameter	Conditions	Min.	Max.	Unit
t_1	Single Bit Time in P2S of CIR	Transmitter	t_{BTN} – Tclk Note1	t_{BTN} + Tclk Note1	ns
		Receiver	t_{BTN} – 2%	t_{BTN} + 2%	ns
t_2	Modulation Signal Pulse Width in CTX/CRX	Transmitter	Tpwd – Tclk Note2	Tpwd +Tclk Note2	ns
		Receiver	Tpwd –2%	Tpwd +2%	ns

Note 1: t_{BTN} is the nominal bit time in Serial Port of P2S block of CIR. It is determined by the setting on the Baud Rate Divisor registers (C0BDHR/C0BDLR). Tclk equals to 1/ FreqEC.
Note 2: Tpwd is normal modulated pulse width on CTX/CRX pin. It is determined by C0TCR registers.

Figure 10-17. External GPIO Controller Data Timing

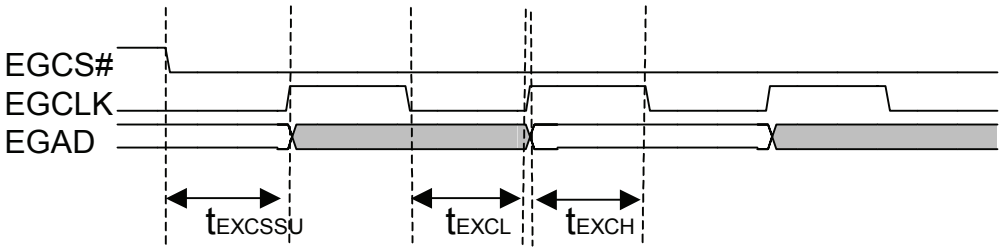

Transmit:

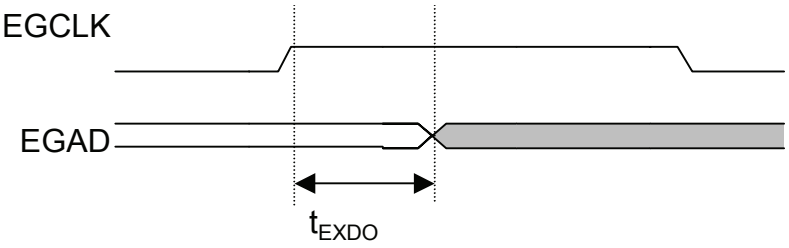

Receive:

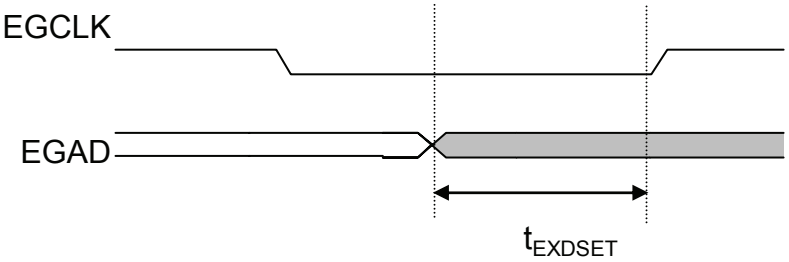

Table 10-17. External GPIO Controller Interface AC Table

Symbol	Parameter	Min.	Typ.	Max.	Unit
t_{EXCSSU}	EGCS# line input set up time	30	—	—	Ns
t_{EXCL}	EGCLK line low time	—	1/FreqEC	—	Ns
t_{EXCH}	EGCLK line high time	—	1/FreqEC	—	Ns
t_{EXDO}	EGAD line output data time	—	—	50	Ns
t_{EXDSET}	EGAD line input set up time	1	—	—	Ns

11. Analog Device Characteristics

Table 11-1. ADC Characteristics

Parameter	Condition	Min.	Typ.	Max.	Unit
Resolution	—	—	10		Bit
Integral Non-linearity Error (INL)	ADC0-9	—	—	±4	LSB
Differential Non-linearity Error (DNL)	ADC0-9	—	—	±4	LSB
Offset Error	ADC0-9	—	—	±4	LSB
Gain Error	ADC0-9	—	—	±4	LSB
External Input Accuracy	ADC0-9	—	—	±4	LSB
ADC Input Voltage Range	—	0	—	3	V
ADC Input Leakage Current	ADC0-9: 0 ≦ Vin ≦ AVCC	—	±1	—	μA
ADC Input Resistance	—	4	—	—	MΩ
ADC Input Capacitance	—	—	—	8	pF
ADC Clock Frequency	—	—	0.5	—	MHz
Voltage Conversion Delay	—	16	512	1000	μs
Voltage Conversion Time	—	—	3.6	—	ms

Table 11-2. DAC Characteristics

Parameter	Condition	Min.	Typ.	Max.	Unit
Resolution	—	—	8	—	Bit
Integral Non-linearity Error (INL)	AVCC = 3.3V	—	—	±1	LSB
Differential Non-linearity Error (DNL)	AVCC = 3.3V	—	—	±0.5	LSB
Offset Error	AVCC = 3.3V	—	—	±1	LSB
Gain Error	AVCC = 3.3V	—	—	±1	LSB
DAC Output Voltage Range	—	0	—	AVCC	V
DAC settling time	C_{load} = 50pF	—	—	1	μs
DAC Output Resistance	0 ≦ Vout ≦ AVCC	3	—	800	Ω
DAC Output Capacitance	—	—	6.5	—	pF

Note: C_{load} = (DAC Output Capacitance) + (External Load Capacitance)

This page is intentionally left blank.

12. Package Information

LQFP 128L Outline Dimensions unit: inches/mm

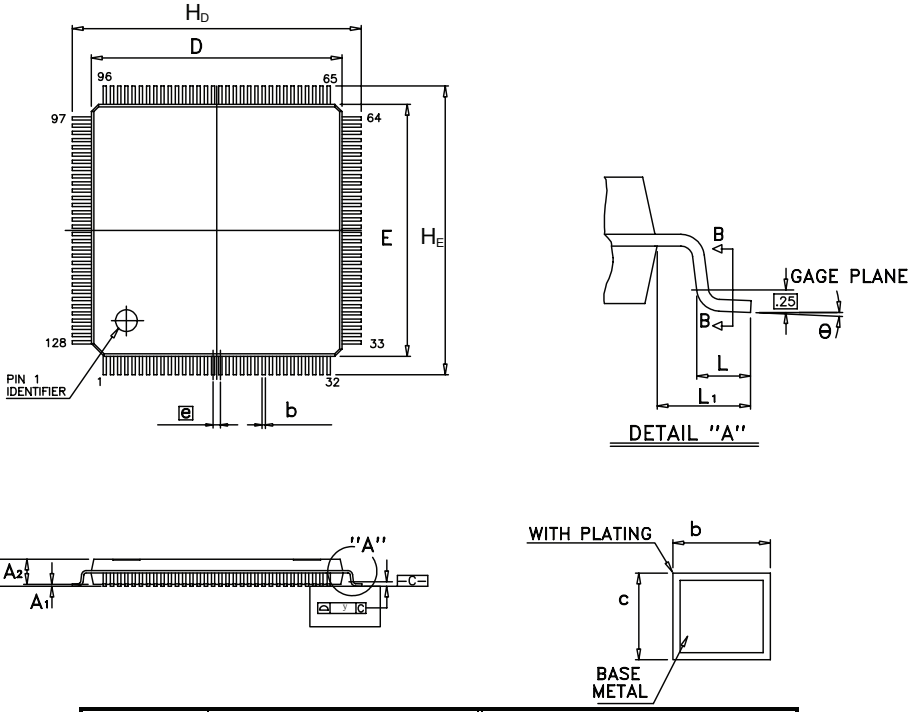

Symbol	Dimensions in inches			Dimensions in mm		
	Min.	Nom.	Max.	Min.	Nom.	Max.
A	-	-	0.063	-	-	1.60
A_1	0.002	-	-	0.05	-	-
A_2	0.053	0.055	0.057	1.35	1.40	1.45
b	0.005	0.007	0.009	0.13	0.18	0.23
c	0.004	-	0.008	0.09	-	0.20
D	0.547	0.551	0.555	13.90	14.00	14.10
E	0.547	0.551	0.555	13.90	14.00	14.10
e	0.016 BSC			0.40 BSC		
H_D	0.624	0.630	0.636	15.85	16.00	16.15
H_E	0.624	0.630	0.636	15.85	16.00	16.15
L	0.018	0.024	0.030	0.45	0.60	0.75
L_1	0.039 REF			1.00 REF		
y	-	-	0.004	-	-	0.10
θ	0°	3.5°	7°	0°	3.5°	7°

Notes:

1. Dimensions D and E do not include mold protrusion.
2. Dimensions b does not include dambar protrusion.
   Total in excess of the b dimension at maximum material condition.
   Dambar cannot be located on the lower radius of the foot.
3. Controlling dimension : Millimeter
4. Reference document : JEDEC MS-026

DI-LQFP128(14*14)v4

QFP 128L Outline Dimensions unit: inches/mm

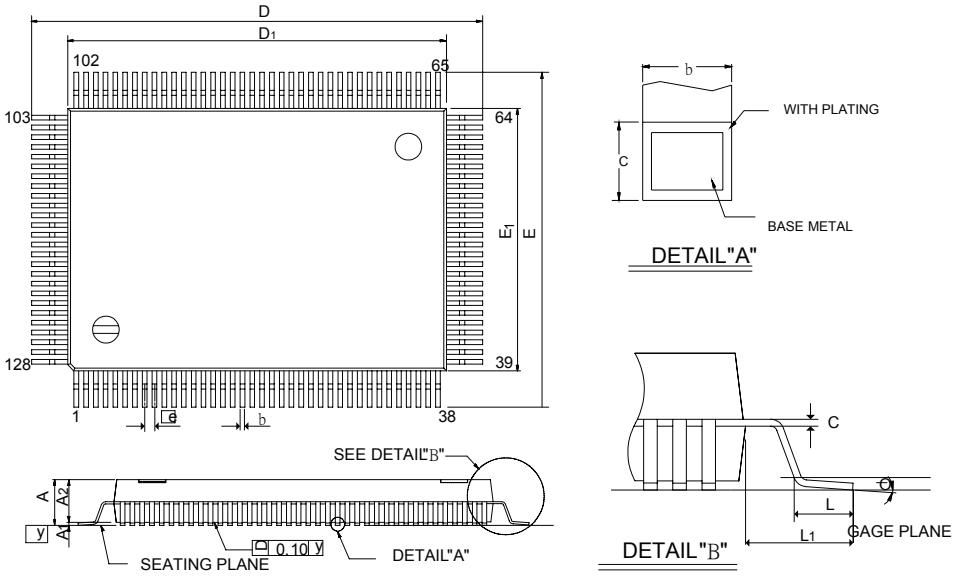

Symbol	Dimensions in inches			Dimensions in mm		
	Min.	Nom.	Max.	Min.	Nom.	Max.
A	-	-	0.134	-	-	3.40
A_1	0.010	-	-	0.25	-	-
A_2	0.107	0.112	0.117	2.73	2.85	2.97
b	0.007	0.009	0.011	0.17	0.22	0.27
c	0.004	-	0.008	0.09	-	0.20
D	0.906	0.913	0.921	23.00	23.20	23.40
D_1	0.783	0.787	0.791	19.90	20.00	20.10
E	0.669	0.677	0.685	17.00	17.20	17.40
E_1	0.547	0.551	0.555	13.90	14.00	14.10
e	0.020 BSC			0.50 BSC		
L	0.029	0.035	0.041	0.73	0.88	1.03
L_1	0.063 BSC			1.60 BSC		
y	-	-	0.004	-	-	0.10
θ	0°	-	7°	0°	-	7°

Notes:

1. Dimensions D_1 and E_1 do not include mold protrusion.
   But mold mismatch is included
2. Dimensions b does not include dambar protrusion.
3. Controlling dimension : Millimeter

DI-QFP128(14*20)v2

13. Ordering Information

Part No.	Package
IT8512E	LQFP 128L
IT8512F	QFP 128L

ITE also provides lead-free component. Please mark " -L " at the end of the Part No. when the parts ordered are lead-free.

This page is intentionally left blank.

14. Top Marking Information

