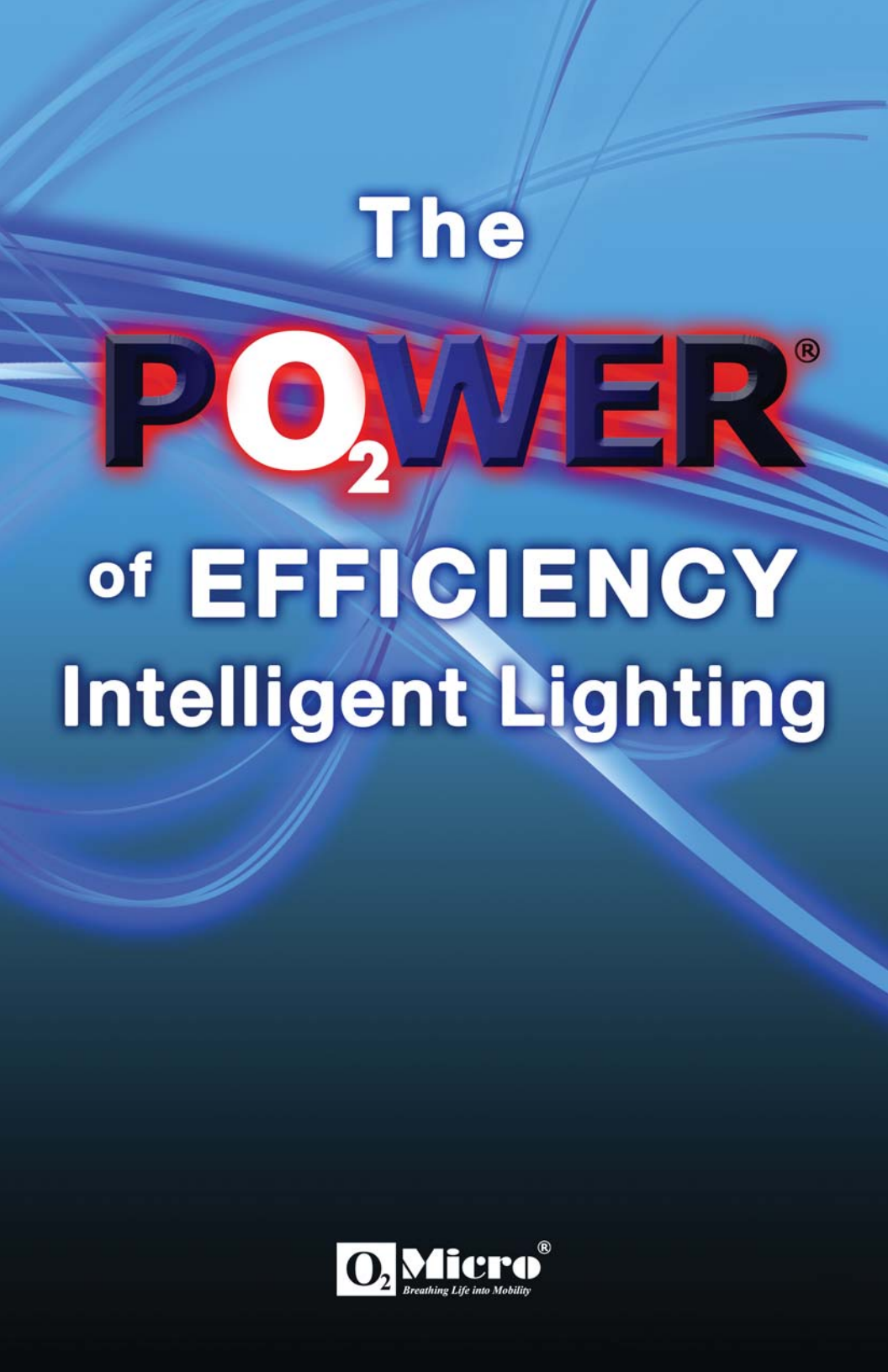
The
POWER®
of EFFICIENCY
Intelligent Lighting
O2Micro®
Breathing Life into Mobility

Intelligent Lighting Family Product Guide

Part Number	Description	Package(s) Available	Page No.
CCFL/EEFL Inverter Controller ICs			
OZ964	Wide Input Range Adaptive	20 SOP, SSOP, Lead-free	5
OZ965	Fixed Input Voltage	16 SOP, TSSOP, Lead-free	6
OZ9910A	Dual Forward PWM Controller	16 SOP, SSOP, Lead-free	7
OZ9913	Piezo Transformer Controller	20 SOP, SSOP, Lead-free	8
OZ9918	SMBus™ Controller	24 SSOP, Lead-free	9
OZ9924*	LCD TV PWM Controller	20 SOP, SSOP, Lead-free	10
OZ9925*	LCD TV Off-Line DC/AC Controller	16 SOP, Lead-free	11
OZ9926*	Large-Size LCD TV Controller	24 SSOP, Lead-free	12
OZ9926A*	Large-Size LCD TV Controller	24 SOP, SSOP, Lead-free	13
OZ9928*	LCD TV Dual Controller	30 SSOP, Lead-free	14
OZ9935	V-Sync Multi-Lamp Controller	16 SOP, Lead-free	15
OZ9936	Precision Operating Frequency Controller	8 PDIP, SOP, Lead-free	16
OZ9937	Universal LCD Panel Controller	16 SOP, Lead-free	17
OZ9938	Multi-Lamp Controller	16 DIP, SOP, Lead-free	18
OZ9939	Multi-Lamp Controller	16 DIP, SOP, Lead-free	19
OZ9970*	Low Cost LCD TV Controller	16 SOP, Lead-free	20

NOTE: The OZ9924, OZ9925, OZ9926, OZ9926A, OZ9928, and OZ9970 are inverter controllers specially designated for use in televisions or applications with multiple lamps, are warranted and licensed for use in these or any other appropriate applications, and are sold with a license to all relevant O_2Micro patents. Sale of all other O_2Micro inverter controllers are subject to the following restrictions: (i) the product is not warranted, indemnified, or licensed for use in televisions or applications with multiple lamps; (ii) sale of the product and license to O_2Micro inverter controller patents are expressly conditioned upon not using this product in a television or applications with multiple lamps; (iii) by using the product, you agree to notify customers of the limited scope of the license and sale; and (iv) use of the product in a television or applications with multiple lamps is expressly prohibited, is a material breach of such sale, and violates any express or implied license to any O_2Micro patent. All sales are subject to O_2Micro's conditions and terms of sale and use.

Intelligent Lighting Family Product Guide

Part Number	Description	Package(s) Available	Page No.
White LED ICs			
OZ9950	White LED Controller	8 MSOP, SOP, Lead-free	21
OZ9951	Low Cost White LED Controller	8 SOP, Lead-free	22
OZ9953	Three String LED Controller	20 SSOP, Lead-free	23
OZ9954	Four String LED Controller	20 SSOP, Lead-free	24
OZ9955	Eight String LED Controller	28 QFN, Lead-free	25
OZ9956A	Six String LED Controller	20 QFN, Lead-free	26
OZ9957	High Power LED Controller	16 SOP, Lead-free	27
OZ9958	Three String LED Controller	16 QFN, SSOP, Lead-free	28
OZ9959	Six String SMBus™ LED Controller	20 QFN, Lead-free	29
MOSFET Drivers			
OZ9982	Dual MOSFET Driver	16 SOP, Lead-free	30
Light Sensors			
OZ70	Ambient Light Sensor	1206 SMD, Lead-free	31
OZ71B/G	Blue and Green Light Sensor	1206 SMD, Lead-free	32
OZ72R	Red Light Sensor	1206 SMD, Lead-free	33
Power Management ICs			
OZ9921	Five-Channel DC/DC	28 QFN, SOP, Lead-free	34
OZ9922	Power Management Controller	48 LQFP, Lead-free	35

Intelligent Lighting

MISSION STATEMENT

Be the leading supplier of highly efficient, power management Intelligent Lighting solutions for electronic products in the Computer, Consumer, Industrial, Automotive, and Communications markets worldwide.

LARGE LCDS



PRODUCTS

O_2Micro® offers a family of ***Intelligent Lighting*** backlight CCFL, EEFL, FFL, and LED controllers ideal for various sizes of LCD display applications such as desktop monitors, televisions, notebooks, global positioning system (GPS), and other mobile applications.

NOTEBOOK COMPUTERS, CELL PHONES, PDAS, GPS'



CAMCORDERS, GAMES, DVD PLAYERS



OZ964

FEATURES

- High efficiency, zero-voltage switching, full bridge topology
- Constant operating frequency
- Built-in PWM dimming control with wide dimming range
- Soft start function
- Built-in intelligence for ignition and normal operation of CCFLs
- Built-in open-lamp and over-voltage protection
- Shutdown delay for input voltage brownout condition
- Supports positive impedance (dark effect) lamps during ignition
- Built-in under-voltage lockout protection
- Toggle pin to reset the IC after shutdown

GENERAL DESCRIPTION

OZ964 is a high efficiency, Pulse Width Modulation (PWM) controller designed for both DC/DC and DC/AC high-voltage applications. The average current mode control is suitable for DC/DC converters where both voltage and current feedback are required, as well as for Cold Cathode Fluorescent Lamp (CCFL) backlight applications for small and large Liquid Crystal Displays (LCD).

OZ964 utilizes a PWM dimming method to achieve a wide dimming range. The IC performs the CCFL dimming function with an analog or Low frequency PWM (LPWM) control.

A shutdown delay function will keep the inverter module in normal operation for a short period of time if the system input voltage suddenly drops and subsequently resumes to a normal level.

APPLICATIONS

- LCD Monitor
- Notebook Computer
- GPS
- Point-of-Sale (POS) Terminal

APPLICATION DIAGRAM

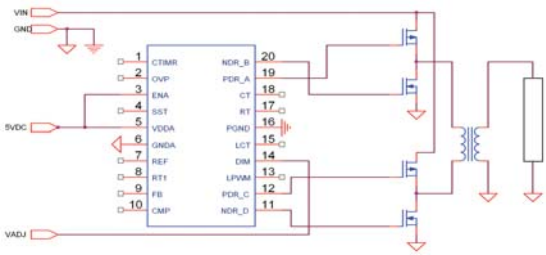

U.S. Patent #'s 6,259,615; 6,396,722; 6,804,129; 6,897,698; 7,026,860; 7,151,394; and more patents pending.

OZ965

FEATURES

- Cost-effective, simple CCFL Inverter solution
- Single-stage power conversion, requiring only a +5V voltage source
- Built-in internal open-lamp and short-circuit protection
- Wide dimming range
- Supports multiple CCFL lamps

GENERAL DESCRIPTION

The OZ965 is a cost-effective, high-efficiency, Cold Cathode Fluorescent Lamp (CCFL) backlight inverter controller whose primary function is to convert a fixed +5 volt DC voltage to approximately 600 VAC. Additionally, the OZ965 performs the lamp dimming function with an analog voltage or Low frequency Pulse Width Modulation (LPWM) control.

APPLICATIONS

- Notebook Computer
- DVD Player
- Camcorder
- Hand Held Game

APPLICATION DIAGRAM

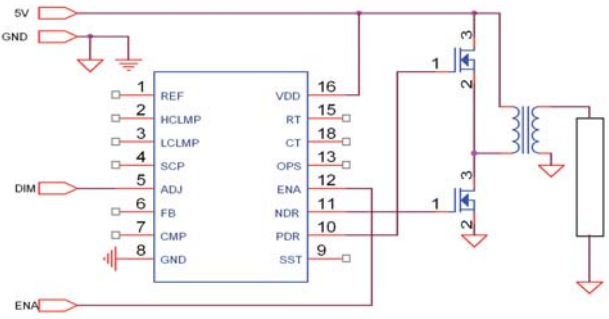

U.S. Patent #5,619,402

OZ9910A

FEATURES

- Controller for high-voltage DC/DC and DC/AC converters
- High-efficiency, zero voltage switching dual forward controller
- Supports positive impedance (dark effect) lamps during ignition
- Feed forward compensation
- Combined analog and/or PWM control modes for wide-range load regulation
- Supports wide input voltage range
- Constant operating frequency
- Soft start function
- Built-in open-load, over-voltage, and over-current protection
- Built-in under-voltage lockout function
- Shutdown delay timer

GENERAL DESCRIPTION

The OZ9910A is a high-efficiency, dual forward Pulse Width Modulation (PWM) controller designed for both DC/DC and DC/AC high voltage applications.

The OZ9910A provides a wide dimming range through Low frequency PWM (LPWM) and/or analog dimming controls. It also provides an option for selecting a different turn-on frequency from the operation frequency that is suitable for loads such as Cold Cathode Fluorescent Lamp (CCFL) and TWT (Traveling Wave Tube).

The OZ9910A provides a built-in feed-forward compensation function for applications requiring a wider, dynamic input voltage range. The feed-forward compensation feature optimizes line regulation. OZ9910A has an integrated shutdown delay feature for positive impedance (dark effect) lamp during ignition and open-lamp conditions.

APPLICATIONS

- LCD Monitor
- Notebook Computer
- GPS
- Point-of-Sale (POS)

APPLICATION DIAGRAM

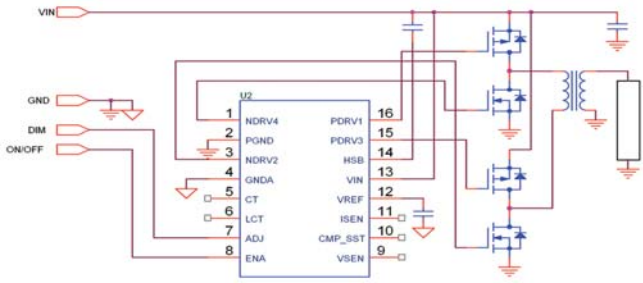

U.S. Patent #'s 6,259,615; 6,396,722; 6,804,129; 6,809,938; 6,856,519; 6,897,698; 6,900,993; 7,120,035; 7,151,394; and more patents pending.

OZ9913

FEATURES

- Wide input voltage range: 4.5V ~ 25V
- Phase shifted full bridge driving topology
- VIN feed-forward compensation for driver output overlap ratio
- Built-in high side power MOSFET driver
- Supports both internal and external PWM dimming
- Adjustable PWM dimming polarity
- Closed loop over-voltage protection
- Striking and open-lamp protection
- Shutdown delay timer

GENERAL DESCRIPTION

OZ9913 is a phase-shifted full bridge Cold Cathode Fluorescent Lamp (CCFL) controller using a piezo transformer. It works with piezoelectric transformers from many manufacturers and achieves optimal efficiency.

With VIN feed-forward compensation, OZ9913 selects the driver output overlap based on the input voltage condition, and by varying the operating frequency, OZ9913 can locate the optimal operating frequency for maximum efficiency. Higher power-conversion efficiency results in lower power dissipation and higher system reliability that are critical in display systems.

APPLICATIONS

- Notebook Computer

APPLICATION DIAGRAM

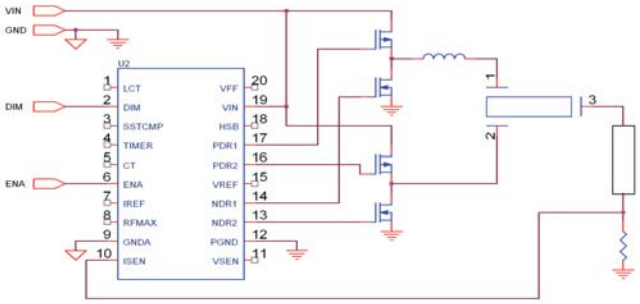

U.S. Patent #'s 6,259,615; 6,396,722; 6,804,129; 6,897,698; 7,151,394; and more patents pending.

OZ9918

FEATURES

- SMBus™ version 1.1 compliant
- Supports SMBus protocol dimming control
- Supports ALS, ALS+DPST™, SMBus, DPST and SMBus + DPST brightness modes
- 256 step dimming control
- Wide input range
- Constant operating frequency
- Soft start function
- Built-in intelligence to manage ignition and normal operation of CCFLs
- Built-in open-lamp and over-voltage/over-current protection
- User-defined striking timer and shutdown delay timer
- Integrated high-side N MOSFET driver
- High drive capability

GENERAL DESCRIPTION

OZ9918 is a high performance Cold Cathode Fluorescent Lamp (CCFL) SMBus controller designed for applications that require a wide input voltage range and SMBus dimming protocol. It achieves a high efficiency power conversion with minimal switching loss utilizing a full-bridge configuration. The IC supports a wide input range and provides a constant, user-defined, operating frequency, ensuring that the load operates at a fixed frequency.

OZ9918 supports Intel's Display Power Savings Technology (DPST). The IC supports five dimming modes with up to 256 step dimming control, that include use with an Ambient Light Sensor (ALS), ALS + DPST, SMBus, DPST and SMBus + DPST. Low frequency Pulse Width Modulation (LPWM) dimming coupled with high-efficiency conversion extends notebook battery life.

APPLICATIONS

- Notebook Computer
- Point of Sale (POS) Terminal

APPLICATION DIAGRAM

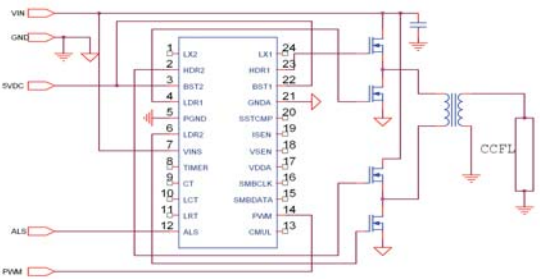

U.S. Patent #'s 6,259,615; 6,396,722; 6,804,129; 6,897,698; 7,151,394; and more patents pending.

OZ9924

FEATURES

- High efficiency, zero-voltage switching
- Constant operating frequency
- Built-in PWM dimming control with wide dimming range
- Soft start function
- Built-in intelligence for ignition and normal operation of CCFLs
- Built-in open-lamp and over-voltage protection
- Shutdown delay for input voltage brownout condition
- Supports positive impedance (dark effect) lamps during ignition
- Built-in under-voltage lockout protection
- Toggle pin to reset the IC after shutdown

GENERAL DESCRIPTION

OZ9924 is a high efficiency, Pulse Width Modulation (PWM) controller designed for large Liquid Crystal Display Television (LCD TV) applications using multiple lamps.

OZ9924 utilizes a PWM dimming method to achieve a wide dimming range. The IC performs the CCFL dimming function with an analog or Low frequency PWM (LPWM) control.

A shutdown delay function will keep the inverter module in normal operation for a short period of time if the system input voltage suddenly drops and subsequently resumes to a normal level.

APPLICATIONS

- LCD TV

APPLICATION DIAGRAM

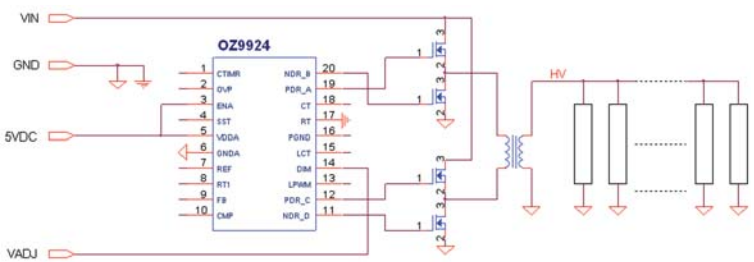

U.S. Patent #'s 6,259,615; 6,396,722; 6,570,344; 6,781,325; 6,804,129; 6,897,698; 6,936,975; 7,026,860; 7,075,245; 7,126,289; 7,151,394; 7,190,123; 7,248,240; and more patents pending.

OZ9925

FEATURES

- Supports off-line applications
- Constant operating frequency
- Support positive impedance (dark effect) lamps during ignition
- Combined analog and PWM dimming control with wide dimming range
- Built-in intelligence for ignition and normal operation of CCFLs
- Built-in open-lamp and over-voltage/current protection
- Optimized soft start function
- User-defined striking and shutdown delay timers

GENERAL DESCRIPTION

OZ9925 is a cost-effective Cold Cathode Fluorescent Lamp (CCFL) power management controller designed for multiple CCFL Liquid Crystal Display Television (LCD TV) applications. It operates at a user-defined constant operating frequency. The operating frequency can be synchronized with an external signal.

The controller provides a wide dimming control range and offers mixed mode dimming control. OZ9925 provides two drive signals for various power conversion topologies.

OZ9925 incorporates high voltage drive capability. The controller can take an input voltage from 10 to 19V and deliver rail-to-rail output drive pulses.

APPLICATIONS

- LCD TV

APPLICATION DIAGRAM

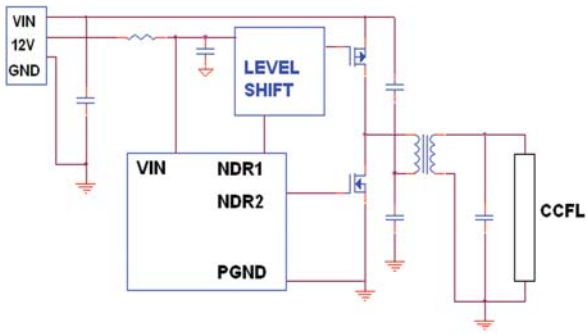

U.S. Patent #'s 6,259,615; 6,396,722; 6,570,344; 6,781,325; 6,804,129; 6,809,938; 6,856,519; 6,900,993; 6,936,975; 7,075,245; 7,120,035; 7,126,289; 7,190,123; 7,248;240; and more patents pending.

OZ9926

FEATURES

- Full-bridge or dual-forward topology
- Integrated high-side N MOSFET driver
- High drive capability
- System synchronization
- Synchronization for multiple ICs
- Supports Limited Current Circuit (LCC)
- Dedicated pins for Analog and LPWM dimming
- Selectable PWM dimming polarity
- Soft start function
- Constant operating frequency
- Built-in intelligence to manage ignition and normal operation of CCFLs
- Open-lamp, over-voltage, over-current, and under-voltage lockout protection
- User-defined striking and shutdown delay timers

GENERAL DESCRIPTION

OZ9926 is a high performance controller designed for large-size Liquid Crystal Display Television (LCD TV) applications requiring multiple lamps. It achieves a high efficiency power conversion with minimal switching loss in full-bridge N-Channel MOSFET topology. The OZ9926 is ideal for single-side drive applications.

The controller provides high drive capability, supports a wide input range, and provides a constant user-defined operating frequency for the load to operate at a fixed frequency.

OZ9926 provides an option of selecting the Pulse Width Modulation (PWM) dimming polarity, and provides two dedicated pins for analog and PWM dimming control.

APPLICATIONS

- LCD TV

APPLICATION DIAGRAM

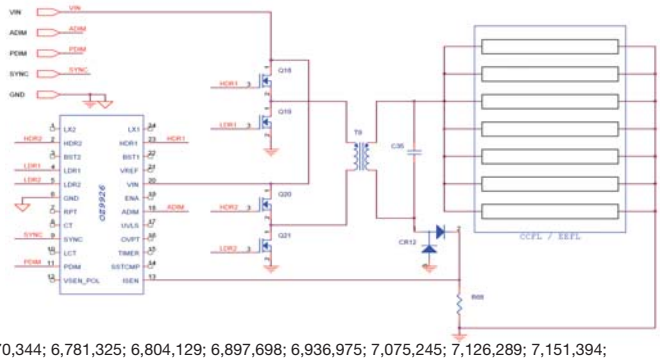

U.S. Patent #'s 6,259,615; 6,396,722; 6,570,344; 6,781,325; 6,804,129; 6,897,698; 6,936,975; 7,075,245; 7,126,289; 7,151,394; 7,190,123; 7,248,240; and more patents pending.

OZ9926A

FEATURES

- VREF and SYNC-RPT noise immunity and lamp current symmetry for start-up
- Full-bridge or dual-forward topology
- Integrated high-side N MOSFET driver
- High drive capability
- System synchronization
- Synchronization for multiple ICs
- Supports Limited Current Circuit (LCC)
- Dedicated pins for Analog and LPWM dimming
- Selectable PWM dimming polarity
- Soft start function
- Constant operating frequency
- Built-in intelligence to manage ignition and normal operation of CCFLs
- Open-lamp, over-voltage, over-current, and under-voltage lockout protection
- User-defined striking and shutdown delay timers

GENERAL DESCRIPTION

OZ9926A is a high performance controller designed for large-size Liquid Crystal Display Television (LCD TV) applications requiring multiple lamps. It achieves a high efficiency power conversion with minimal switching loss in full-bridge N-Channel MOSFET topology. OZ9926A is ideal for differential drive applications.

The controller provides high drive capability, supports a wide input range, and provides a constant user-defined operating frequency for the load to operate at a fixed frequency.

OZ9926A provides an option of selecting the Pulse Width Modulation (PWM) dimming polarity, and provides two dedicated pins for analog and PWM dimming control.

APPLICATIONS

- LCD TV

APPLICATION DIAGRAM

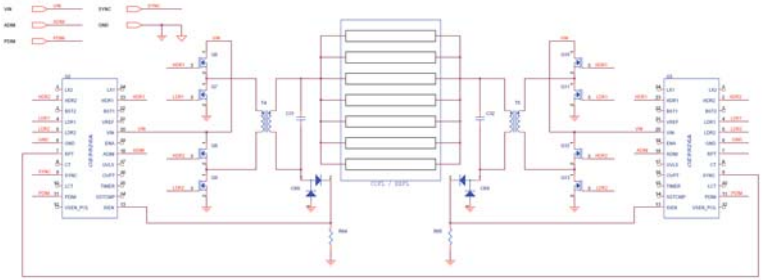

U.S. Patent #'s 6,259,615; 6,396,722; 6,570,344; 6,781,325; 6,804,129; 6,897,698; 6,936,975; 7,075,245; 7,126,289; 7,151,394; 7,190,123; 7,248,240; and more patents pending.

OZ9928

FEATURES

- Dual CCFL inverter controller
- Synchronization for multiple ICs
- Supports differential drive
- 180 degree phase-shift PWM dimming
- Mixed-mode dimming control
- Selectable shutdown protection mode
- User-defined ignition and shutdown delay timers
- Built-in intelligence for ignition and normal operation of CCFLs
- Built-in open-lamp and over-voltage protection
- Integrated high-side N MOSFET driver
- High drive capability
- Supports wide input range and system synchronization
- Constant operating frequency

GENERAL DESCRIPTION

OZ9928 is a high performance, cost-effective 2-channel controller designed for large-size Cold Cathode Fluorescent Lamp (CCFL) or External Electrode Fluorescent Lamp (EEFL) Liquid Crystal Display Television (LCD TV) applications.

The controller provides six drive signals and is capable of driving full-bridge and Class-D topologies. The drive outputs are fixed phase when used for single-side or differential drive applications. Multiple OZ9928s can be synchronized to drive numerous lamps.

OZ9928 provides total system protection for differential drive and single-side drive applications.

APPLICATIONS

- LCD TV

APPLICATION DIAGRAM

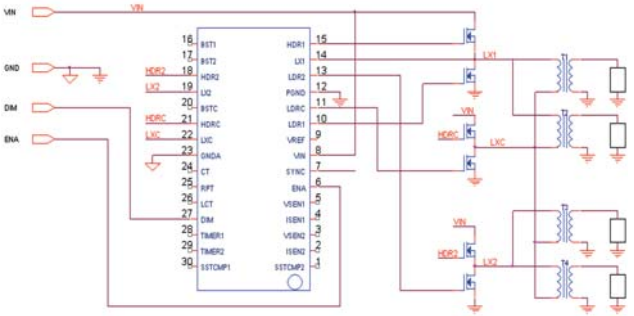

U.S. Patent #'s 6,259,615; 6,396,722; 6,501,234; 6,570,344; 6,707,264; 6,781,325; 6,804,129; 6,897,698; 6,936,975; 7,075,245; 7,126,289; 7,151,394; 7,190,123; 7,248,240; and more patents pending.

OZ9935

FEATURES

- VSYNC synchronization for LPWM dimming frequency
- Independent PWM and analog dimming control
- Supports positive impedance (dark effect) lamps during ignition
- Constant operating frequency
- Built-in intelligence for ignition and normal operation of CCFLs
- User-defined ignition time and shutdown delay time
- Built-in open-lamp and over-voltage protection
- Optimized soft start function

GENERAL DESCRIPTION

The OZ9935 is a high performance Cold Cathode Fluorescent Lamp (CCFL) controller designed to drive large-size Liquid Crystal Display Monitor (LCDM) applications.

OZ9935 provides two drive signals for most power conversion topologies, while maintaining high-efficiency operation. The controller provides a soft start operation, current and voltage regulation, over-voltage and over-current protection, independent pins for Pulse Width Modulation (PWM) and analog dimming control coupled with high drive capability.

During Low frequency PWM (LPWM) dimming, the LPWM frequency is synchronized with an external VSYNC signal by a factor of 4 times. The control logic provides a regulated ignition voltage and offers a high level of integration, while maintaining flexibility and high-efficiency operation that reduces external component heating, resulting in higher reliability and longer CCFL life.

APPLICATIONS

- LCD Monitor

APPLICATION DIAGRAM

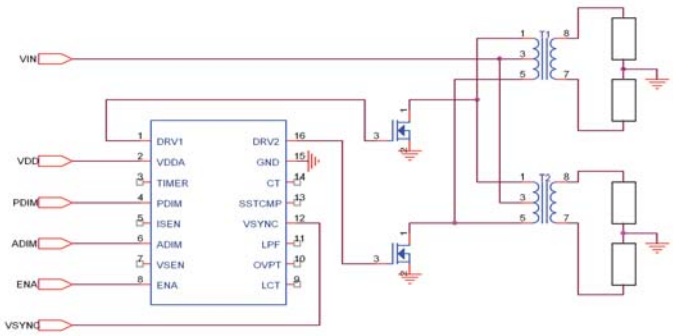

U.S. Patent #'s 6,259,615; 6,396,722; 6,559,606; 6,804,129; 6,809,938; 6,856,519; 6,900,993; 7,120,035; and more patents pending.

OZ9936

FEATURES

- Low cost LCD monitor inverter solution
- Constant operating frequency
- Supports positive impedance (dark effect) lamps during ignition
- Built-in intelligence for ignition and normal operation of CCFLs
- Built-in striking and shutdown delay timer
- Built-in open-lamp and over-voltage protection
- Optimized soft start function
- Supports both analog and external PWM dimming control

GENERAL DESCRIPTION

OZ9936 is a Cold Cathode Fluorescent Lamp (CCFL) controller designed to drive CCFLs in Liquid Crystal Display Monitor (LCDM) applications. The controller provides analog dimming control where the CCFL brightness is controlled by adjusting the current amplitude. In addition, the IC provides a Pulse Width Modulation (PWM) dimming function with an external PWM signal.

The OZ9936 provides two drive signals for most power conversion topologies, such as push-pull, half-bridge, full-bridge or Class-D inverters while maintaining high efficiency operation. The highly integrated controller provides current and voltage regulation, soft start operation, over-voltage protection and an external enabling function while maintaining a high-degree of design flexibility.

APPLICATIONS

- LCD Monitor

APPLICATION DIAGRAM

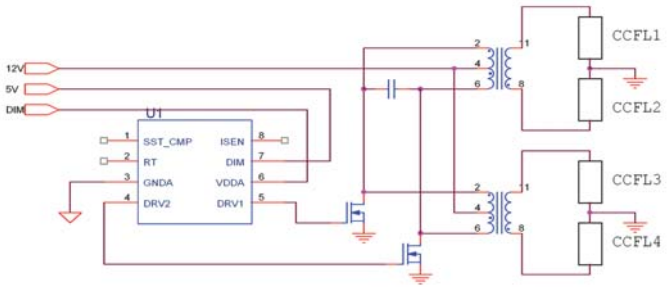

U.S. Patent #'s 6,259,615; 6,396,722; 6,559,606; 6,804,129; 6,809,938; 6,856,519; 6,900,993; 7,120,035; and more patents pending.

OZ9937

FEATURES

- Universal LCDM CCFL Inverter
- Supports positive impedance (dark effect) lamps during ignition
- Independent PWM and analog dimming control
- Operating frequency compensation
- User-defined PWM dimming frequency
- User-defined striking and normal operating frequency
- Built-in open-lamp protection and over-voltage protection
- User-defined ignition time and shutdown delay time
- Optimized soft start function

GENERAL DESCRIPTION

The OZ9937 is a high performance Cold Cathode Fluorescent Lamp (CCFL) controller designed to drive large-size Liquid Crystal Display Monitor (LCDM) applications. The controller receives a panel ID signal from the system and provides an optimal operating frequency and power to the LCD panel. The adaptive feature enables a single inverter design to suit various panel applications.

OZ9937 provides two drive signals for most power conversion topologies while maintaining high-efficiency operation. The controller provides soft start operation, current and voltage regulation, over-voltage and over-current protection, and independent pins for analog and Pulse Width Modulation (PWM) dimming functions.

APPLICATIONS

- LCD Monitor

APPLICATION DIAGRAM

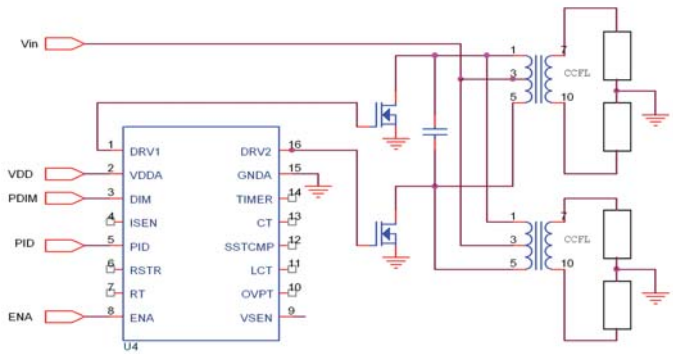

U.S. Patent #'s 6,259,615; 6,396,722; 6,559,606; 6,804,129; 6,809,938; 6,856,519; 6,900,993; 7,120,035; and more patents pending.

OZ9938

FEATURES

- Positive PWM dimming polarity
- Constant operating frequency
- Supports positive impedance (dark effect) lamps during ignition
- User-defined ignition time and shutdown delay time
- Multiple mode dimming control
- Built-in intelligence for ignition and normal operation of CCFLs
- Built-in open-lamp protection and over-voltage protection for backlight system
- Optimized soft start function

GENERAL DESCRIPTION

OZ9938 is a high performance Cold Cathode Fluorescent Lamp (CCFL) controller designed to drive large-size Liquid Crystal Display (LCD) applications.

The OZ9938 provides two drive signals for most power conversion topologies while maintaining high efficiency operation. The Pulse Width Modulation (PWM) controller provides soft start operation, current and voltage regulation, over-voltage and over-current protection, high drive capability and multiple dimming functions (internal or external PWM or analog dimming functions).

The control logic provides a regulated ignition voltage and appropriate protection features for over-voltage and over-current conditions.

APPLICATIONS

- LCD Monitor
- Notebook Computer
- Digital Photo Frame

APPLICATION DIAGRAM

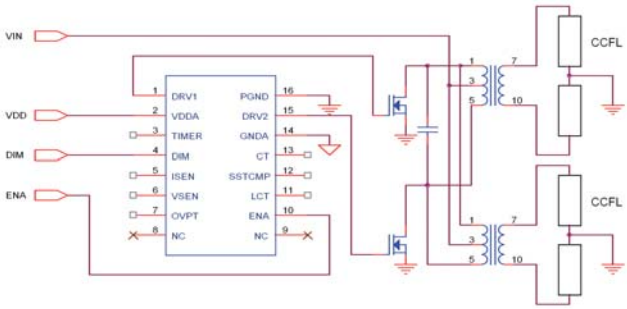

U.S. Patent #'s 6,259,615; 6,396,722; 6,559,606; 6,804,129; 6,809,938; 6,856,519; 6,900,993; 7,120,035; and more patents pending.

OZ9939

FEATURES

- Negative PWM dimming polarity
- Constant operating frequency
- Supports positive impedance (dark effect) lamps during ignition
- User-defined ignition time and shutdown delay time
- Multiple mode dimming control
- Built-in intelligence for ignition and normal operation of CCFLs
- Built-in open-lamp and over-voltage protection for backlight system
- Optimized soft start function

GENERAL DESCRIPTION

OZ9939 is a high performance Cold Cathode Fluorescent Lamp (CCFL) controller designed to drive large-size Liquid Crystal Display (LCD) applications.

The OZ9939 provides two drive signals for most power conversion topologies while maintaining high efficiency operation. The Pulse Width Modulation (PWM) controller provides soft start operation, current and voltage regulation, over-voltage and over-current protection, high drive capability and multiple dimming functions (internal or external PWM or analog dimming functions).

The control logic provides a regulated ignition voltage and appropriate protection features for over-voltage and over-current conditions.

APPLICATIONS

- LCD Monitor
- Notebook Computer
- Digital Photo Frame

APPLICATION DIAGRAM

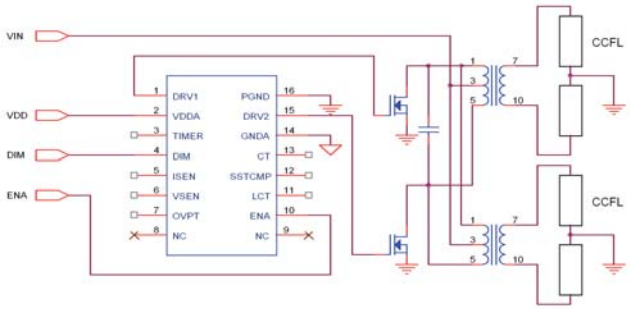

U.S. Patent #'s 6,259,615; 6,396,722; 6,559,606; 6,804,129; 6,809,938; 6,856,519; 6,900,993; 7,120,035; and more patents pending.

OZ9970

FEATURES

- Positive PWM dimming polarity
- Constant operating frequency
- Drives positive/negative impedance lamps during ignition
- High drive current for external MOSFETs
- User-defined ignition time and shutdown delay time
- Multiple mode dimming control
- Built-in intelligence for ignition and normal operation of CCFLs
- Built-in open-lamp and over-voltage protection for backlight system
- Optimized soft start function

GENERAL DESCRIPTION

OZ9970 is a low cost, high performance Cold Cathode Fluorescent Lamp (CCFL) controller designed to drive large-size Liquid Crystal Display Television (LCD TV) applications.

The OZ9970 provides two drive signals for most power conversion topologies while maintaining high efficiency operation. The Pulse Width Modulation (PWM) controller provides soft start operation, current and voltage regulation, over-voltage and over-current protection, high drive capability and multiple dimming functions (internal or external PWM or analog dimming functions).

The control logic provides a regulated ignition voltage and appropriate protection features for over-voltage and over-current conditions.

APPLICATIONS

- LCD TV

APPLICATION DIAGRAM

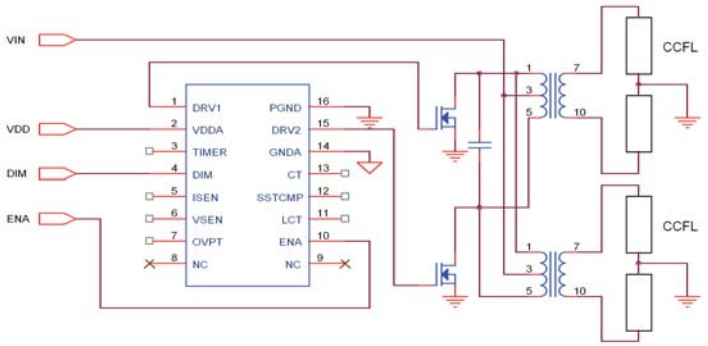

U.S. Patent #'s 6,259,615; 6,396,722; 6,559,606; 6,570,344; 6,781,325; 6,804,129; 6,809,938; 6,856,519; 6,900,993; 6,936,975; 7,075,245; 7,120,035; 7,126,289; 7,190,123; 7,248,240; and more patents pending.

OZ9950

FEATURES

- High efficiency DC/DC step up converter controller for white LED's
- 1.8 V to 5.5 V input voltage range
- PWM or Analog dimming control
- Over-voltage protection
- Soft start
- Low standby current

GENERAL DESCRIPTION

OZ9950 is a high efficiency, DC/DC step up converter controller that allows a series connection of White LEDs resulting in uniform brightness.

The step-up converter topology works in a discontinuous mode to allow the use of a small inductor and ease of loop stability that results in a high efficiency, low cost module. An external Pulse Width Modulation (PWM) signal or external voltage can be used for the dimming control function.

APPLICATIONS

- PDVD
- Cellular Phone
- PDA
- GPS and other Color Display Backlight
- Digital Photo Frame

APPLICATION DIAGRAM

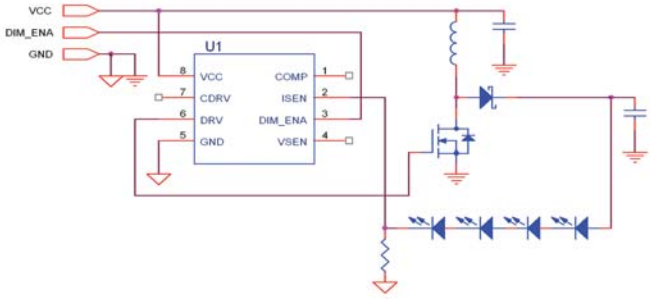

Patent pending.

OZ9951

FEATURES

- High efficiency DC/DC step up converter controller for white LED's
- 1.8 V to 5.5 V input voltage range
- Over-voltage protection
- Soft start
- Low standby current

GENERAL DESCRIPTION

OZ9951 is a low cost, high efficiency, DC/DC step up converter that allows a series connection of White LEDs resulting in uniform brightness. The step-up converter topology works in a discontinuous mode to allow the use of a small inductor and ease of loop stability that results in a high efficiency and low cost module.

The IC provides the user with an over-voltage protection feature. A soft start feature is provided to minimize in-rush current during start-up.

APPLICATIONS

- PDVD
- Cellular Phone
- PDA
- Color Display Backlight
- Digital Photo Frame

APPLICATION DIAGRAM

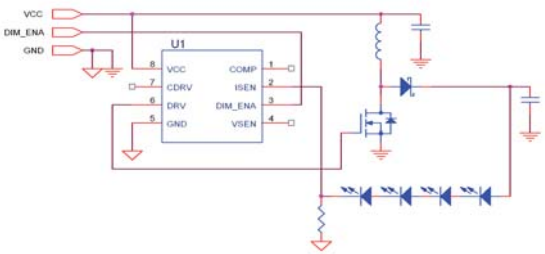

Patent pending.

OZ9953

FEATURES

- Three string LED controller
- High frequency DC/DC power converter for LED backlight applications
- Integrated LED current balance control circuit
- 4V to 25V input voltage range
- Up to 1.0MHz switching frequency
- Up to 350mA LED current per string
- External PWM dimming control
- Over-voltage, short circuit, and over-current protection
- Soft start
- Low standby current

GENERAL DESCRIPTION

OZ9953 is a high efficiency, DC/DC controller that drives a number of LEDs connected in a series/parallel configuration, suitable for both high and low power LED backlight solutions. It provides a high efficiency DC/DC conversion circuit which is good for multiple topologies such as boost, SEPIC, fly-back, etc. It has three LED current sense inputs in an “OR” configuration for improved backlight reliability. This allows the backlight to remain functioning in the event that any string (s) is damaged during normal operation.

The IC incorporates built-in intelligence to compensate the forward voltage difference between the LED strings and automatically balances the current among the strings. The boost converter outputs the minimum voltage required to drive the LED string with the largest forward voltage. This results in better power efficiency for system operation.

The controller receives an external Pulse Width Modulation (PWM) signal for the dimming control function, and features a fast LED current rise/fall time to achieve a wide dimming range and minimizes LED color distortion during the dimming mode.

APPLICATIONS

- LCD Monitor
- LCD TV
- Notebook Computer
- GPS

APPLICATION DIAGRAM

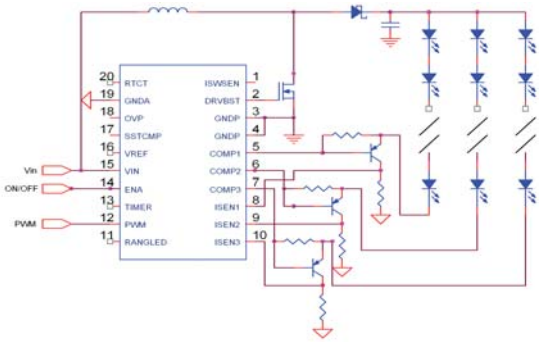

Patent pending.

OZ9954

FEATURES

- Four string LED Controller
- High frequency DC/DC power converter for LED backlight application
- 4V to 40V input voltage range
- Integrated LED current balance control circuit
- Over-voltage and over load protection
- Up to 1MHz switching frequency
- Up to 350mA per string
- External PWM dimming control
- Over-voltage, short circuit, and over-current protection
- Soft start
- Low standby current

GENERAL DESCRIPTION

OZ9954 is a high efficiency, DC/DC controller that drives a number of LEDs connected in a series/parallel configuration, suitable for both high and low power LED backlight solutions. It provides a high efficiency DC/DC conversion circuit which is good for multiple topologies such as boost, SEPIC, fly-back, etc. It has four LED current sense inputs in an “OR” configuration for improved backlight reliability. This allows the backlight to remain functioning in the event that any string (s) is damaged during normal operation.

The IC incorporates built-in intelligence to compensate the forward voltage difference between the LED strings and automatically balances the current among the strings. The boost converter outputs the minimum voltage required to drive the LED string with the largest forward voltage. This results in better power efficiency for system operation.

OZ9954 receives an external Pulse Width Modulation (PWM) signal for the dimming control function, and features a fast LED current rise/fall time to achieve a wide dimming range and minimizes LED color distortion during the dimming mode.

APPLICATIONS

- LCD Monitor
- LCD TV
- Notebook Computer
- GPS

APPLICATION DIAGRAM

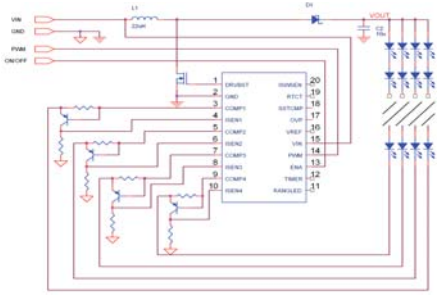

Patent pending.

OZ9955

FEATURES

- Eight string LED controller
- High frequency DC/DC power converter for LEDs
- Integrated LED current balance control circuit
- Integrated power MOSFET
- 5V to 33V input voltage range
- Up to 2.0MHz switching frequency
- 10mA to 30mA LED current per string
- Supports internal or external PWM dimming
- Over-voltage and over-current protection
- Soft start
- Low standby current

GENERAL DESCRIPTION

The high efficiency, DC/DC controller drives a number of LEDs connected in series/parallel configuration. It provides eight LED current sense inputs in an “OR” configuration for improved backlight reliability. This allows the backlight to remain functioning in the event that any string (s) is damaged during normal operation.

OZ9955 can receive either an analog signal or an external Pulse Width Modulation (PWM) signal for the dimming control function. It provides the user with over-voltage and over-current protection features, and a soft start feature to minimize in-rush current during start-up.

The LED controller provides an integrated circuit to balance the current flow for each LED string, as well as, an integrated power MOSFET.

APPLICATIONS

- Notebook Computer

APPLICATION DIAGRAM

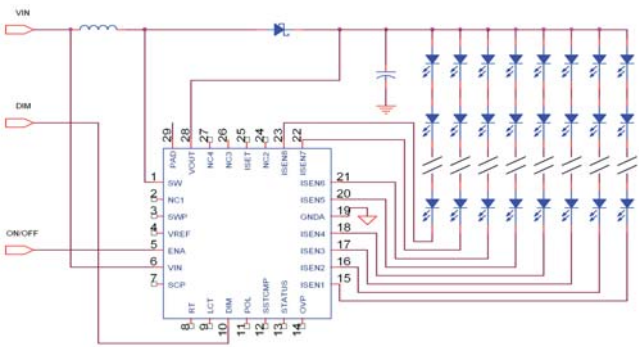

Patent pending.

OZ9956A

FEATURES

- Six string LED controller
- High frequency DC/DC power converter for LEDs
- Integrated LED current balance control circuit
- Integrated power MOSFET
- 4V to 25V input voltage range
- Up to 2.0MHz switching frequency
- 10mA to 30mA LED current per string
- Supports analog or external PWM dimming
- Over-voltage and over-current protection
- Soft start
- Low standby current

GENERAL DESCRIPTION

The OZ9956A high efficiency, DC/DC controller drives a number of LEDs connected in series/parallel configuration. It provides six LED current sense inputs in an “OR” configuration for improved backlight reliability. This allows the backlight to remain functioning in the event that any string (s) is damaged during normal operation.

OZ9956A can receive either an analog signal or an external Pulse Width Modulation (PWM) signal for the dimming control function. It provides the user with over-voltage and over-current protection features, and a soft start feature to minimize in-rush current during start-up.

OZ9956A provides an integrated circuit to balance the current flow for each LED string.

APPLICATIONS

- Notebook Computer

APPLICATION DIAGRAM

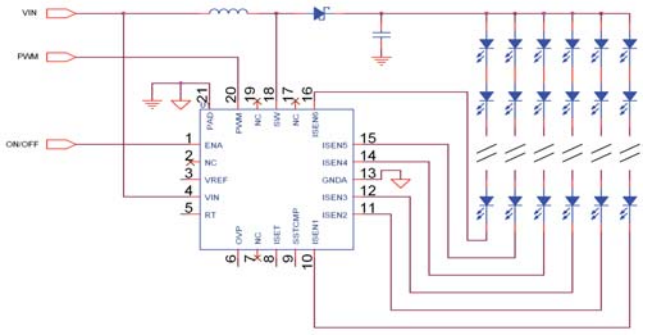

Patent pending.

OZ9957

FEATURES

- High frequency DC/DC power converter for white and RGB LEDs
- 4.5V to 30.0V input voltage range
- Up to 600KHz switching frequency
- System synchronization
- Synchronization for multiple ICs
- Drives 1 or more strings
- External PWM dimming
- Adjustable PWM phase-shift for dimming control
- Over-voltage, over-current, and open-lamp protection
- Shutdown delay timer
- Soft start
- Low standby current

GENERAL DESCRIPTION

The OZ9957 is a high efficiency, DC/DC controller that can drive either high power white or RGB LEDs connected in a series configuration. It can drive 1 string of up to 20-350mA LEDs in series or multiple strings in parallel using O_2Micro's proprietary LED current balance circuit. The system operating frequency can be set either internally or with an external signal. In addition, multiple ICs are synchronized by either an internal or external signal.

OZ9957 receives an external Pulse Width Modulation (PWM) signal for the dimming control function. It provides the user with over-voltage, over-current, and open-lamp protection features.

APPLICATIONS

- PDVD
- Car TV
- GPS
- Color Display Backlight

APPLICATION DIAGRAM

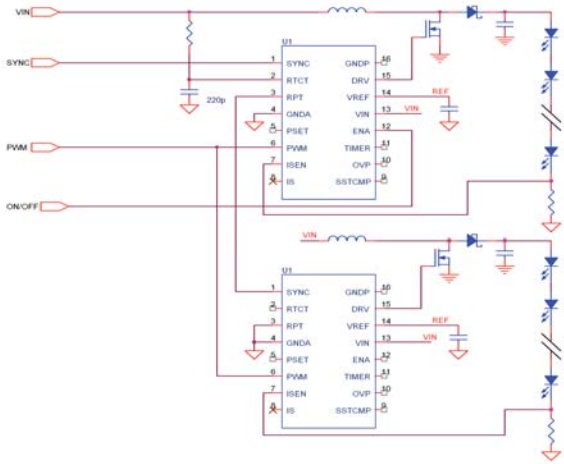

Patent pending.

OZ9958

FEATURES

- High frequency DC/DC power converter for LEDs
- 5V to 27V input voltage range
- Up to 600KHz switching frequency
- Drives up to 20 LEDs in series, 3 strings in parallel
- Up to 110mA per string
- Analog or external PWM dimming
- Over-voltage protection
- Over-current protection with delay timer
- Soft start
- Low standby current

GENERAL DESCRIPTION

The OZ9958 high efficiency, DC/DC controller drives a number of LEDs connected in series/parallel configuration. It provides three LED current sense inputs in an “OR” configuration for improved backlight reliability. This allows the backlight to remain functioning in the event that any string (s) is damaged during normal operation.

The controller can receive either an analog or external Pulse Width Modulation (PWM) signal for the dimming control function. It provides the user with over-voltage and over-current protection features, and a soft start feature to minimize in-rush current during start-up.

OZ9958 provides an integrated switch that will cut off LED current flow for each string if the IC is disabled or during the PWM dimming “OFF” period. This feature provides minimum standby current and a wide dimming range.

APPLICATIONS

- PDVD
- Car TV
- GPS
- Color Display Backlight

APPLICATION DIAGRAM

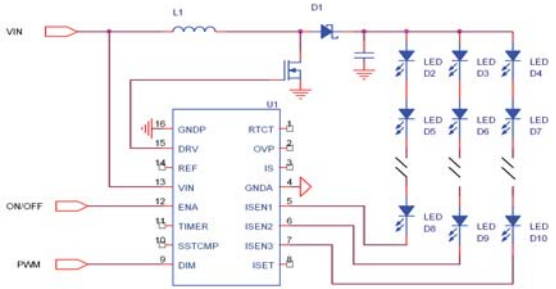

Patent pending.

OZ9959

FEATURES

- Six string, SMBus™ LED controller
- SMBus version 2.0 compliant
- Supports SMBus protocol dimming control
- Supports SMBus, DPST™ and SMBus+DPST brightness control modes
- 256 step dimming control
- High frequency DC/DC power converter for LEDs
- Integrated LED current balance control circuit
- Integrated power MOSFET
- Drives up to 6 strings in parallel
- Over-current, over-voltage, over temperature protection
- Soft start function

GENERAL DESCRIPTION

OZ9959 is a high efficiency, six string LED controller with SMBus interface that drives a number of LEDs connected in serial or parallel configuration. The IC provides six (6) LED current sense inputs in an “OR” configuration for improved backlight reliability. This allows the backlight to remain functioning in the event that any string (s) is damaged during normal operation.

OZ9959 supports Intel’s DPST (Display Power Savings Technology) technology. The IC supports three dimming modes with up to 256 step dimming control, that include use with SMBus, DPST and SMBus + DPST. Low frequency Pulse Width Modulation (LPWM) dimming coupled with high-efficiency conversion extend notebook battery life.

APPLICATIONS

- Notebook Computer
- Point of Sale (POS)

APPLICATION DIAGRAM

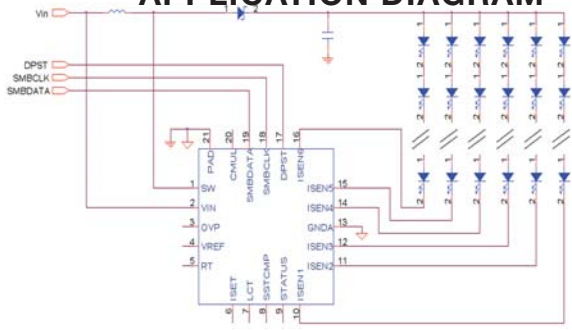

Patent pending.

OZ9982

FEATURES

- High peak output current
- Optimized Break-Before-Make (BBM)
- 38V floating capability of BST pin
- Ultra Low current consumption in disable state

GENERAL DESCRIPTION

OZ9982 is ideal for multiple Cold Cathode Fluorescent Lamp (CCFL) or External Electrode Fluorescent Lamp (EEFL) applications. It contains two independent high-speed dual MOSFET drivers optimized to drive N-Channel power MOSFETs in high current multiphase synchronous DC/DC buck converters and Liquid Crystal Display (LCD) Monitor/LCD TV inverters.

Due to the low resistance of the drivers and optimized Break-Before-Make (BBM), OZ9982 drivers are ideal for high efficiency power conversion.

The low resistance of the drivers allow OZ9982 to drive high capacitive loads, useful in applications that require the use of multiple transistors in parallel.

APPLICATIONS

- LCD Monitor
- LCD TV

APPLICATION DIAGRAM

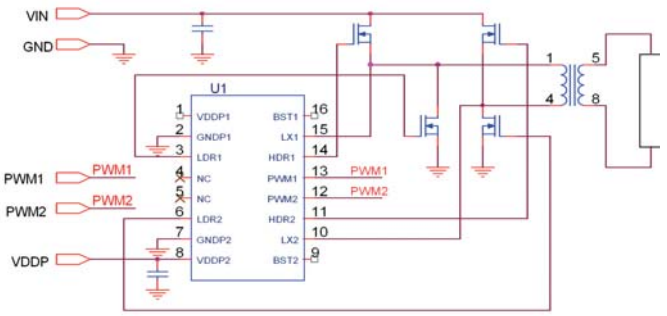

Patent pending.

OZ70

FEATURES

- Monolithic IC consisting of photodiode and current amplifier
- Supply voltage range: 3.3V to 5.5V
- Wide dynamic range
- Low standby current
- Linear output light source

GENERAL DESCRIPTION

OZ70 is an ultra-compact surface mount light sensor used to detect ambient light illuminating intensity. The IC is ideal for monitoring ambient light and adjusting Liquid Crystal Display (LCD) panel brightness.

OZ70 consists of an integrated photodiode and current amplifier. The sensor outputs a current proportional to the ambient light source.

The photo sensitivity is superior to that of a photodiode. OZ70 has excellent spectral sensitivity to the illuminating light source and provides accurate output linearity. The IC has a wide dynamic range of 1 Lux to 2,000 Lux.

APPLICATIONS

- Notebook Computer
- PDVD
- Cellular Phone
- PDA
- GPS

APPLICATION DIAGRAM

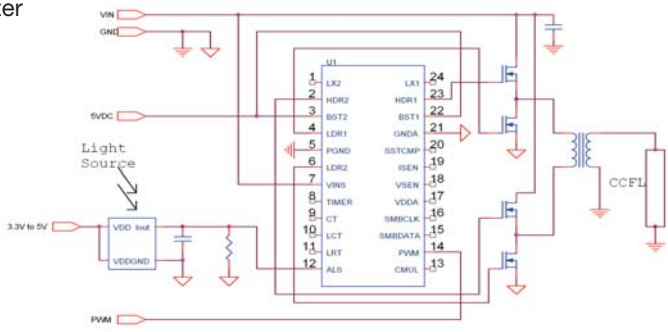

Patent pending.

OZ71B/G

FEATURES

- Monolithic IC consisting of photodiode and current amplifier
- Supply voltage range: 3.3V to 5.5V
- Wide dynamic range
- Low standby current
- Linear output light source

GENERAL DESCRIPTION

OZ71B (blue light sensor) and OZ71G (green light sensor) are ultra-compact surface mount light sensors used to detect blue or green light illuminating intensity, respectively. The IC is ideal for monitoring blue or green light and adjusting LED panel brightness.

OZ71B/G consists of an integrated photodiode, current amplifier and blue or green package cover. The sensor outputs a current proportional to the blue or green light source.

APPLICATIONS

- LCD Monitor
- LCD TV

APPLICATION DIAGRAM

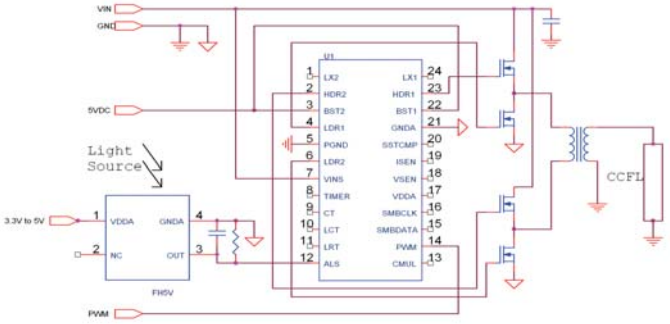

Patent pending.

OZ72R

FEATURES

- Monolithic IC consisting of photodiode and current amplifier
- Supply voltage range: 3.3V to 5.5V
- Wide dynamic range
- Low standby current
- Linear output light source

GENERAL DESCRIPTION

OZ72 is an ultra-compact surface mount light sensor used to detect red light illuminating intensity. The IC is ideal for monitoring red light and adjusting LED panel brightness.

OZ72 consists of an integrated photodiode, current amplifier and a red filter as the package cover. The sensor outputs a current proportional to the red light source.

APPLICATIONS

- LCD Monitor
- LCD TV

APPLICATION DIAGRAM

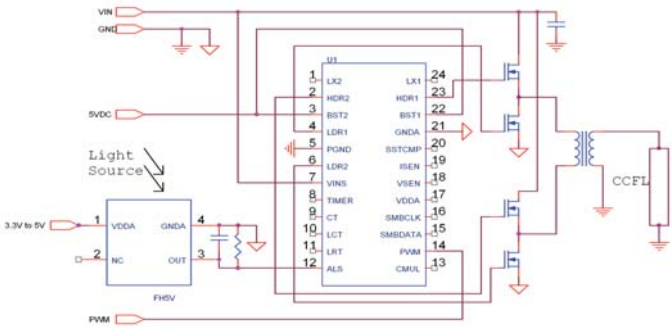

Patent pending.

OZ9921

FEATURES

- Five channel DC/DC controller
- Main Buck Converter
- Second Buck Converter
- Boost Converter
- Second Boost Converter
- Buck-Boost Converter
- Soft start function
- Over-voltage, over load, and over-current protection

GENERAL DESCRIPTION

OZ9921 is a high voltage, high efficiency DC/DC converter controller designed for Liquid Crystal Display (LCD) panel applications. It controls the power conversion for five DC/DC channels from a single input power supply of 6V to 27V while providing the power needed to drive the source and gate drivers and DC/DC converter in a LCD application.

OZ9921 consists of a main buck converter, second buck converter, two boost converters and one buck-boost converter.

APPLICATIONS

- LCD TV
- Small LCD Panel Applications
- Car TV
- GPS

APPLICATION DIAGRAM

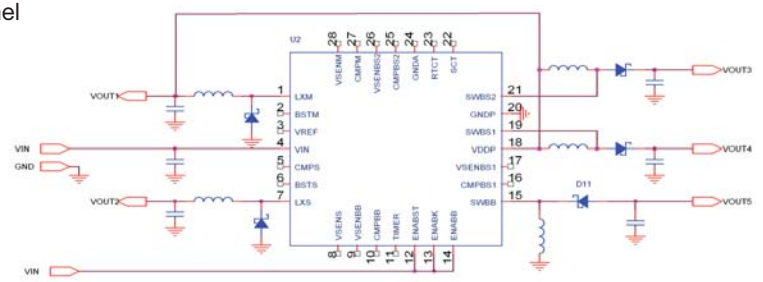

U.S. Patent #7,057,611 and more patents pending.

OZ9922

FEATURES

- Integrated LCD panel power management controller
- Input voltage range: 6V to 27V
- DC/AC inverter controller
- Main Buck Converter
- Second Buck Converter
- Three general purpose user-configurable Boost Converters and/or Buck-Boost converters
- Over-voltage and over load protection
- Soft start

GENERAL DESCRIPTION

The OZ9922 is a high efficiency power management controller. It controls the power conversion of DC/AC and DC/DC converters from a single input power source that provides the power needed to drive the backlight module, source and gate drivers and DC/DC converters in a LCD display application.

OZ9922 consists of a Cold Cathode Fluorescent Lamp (CCFL) inverter controller, main buck converter, second buck converter, and three general purpose converters that can be configured in any combination of boost converters and/or buck-boost converters.

APPLICATIONS

- Small LCD Panel Applications
- GPS

APPLICATION DIAGRAM

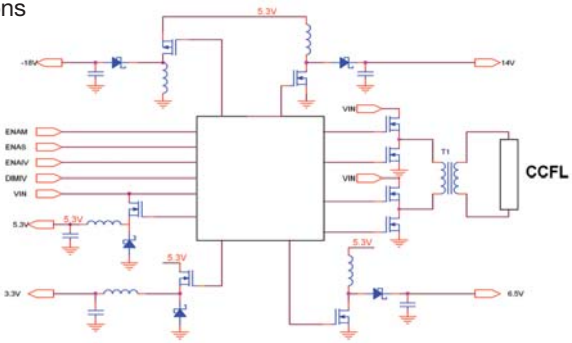

U.S. Patent #'s 6,259,615; 6,396,722; 6,804,129; 6,897,698; 7,026,860; 7,057,611; 7,151,394; and more patents pending.

Company Background

Founded in April 1995, O_2Micro® International Limited (NASDAQ®: OIIM; SEHK: 0457) designs, develops and markets innovative ***power management*** and ***security*** components and systems for the Computer, Consumer, Industrial/Automotive, and Communications markets.

O_2Micro maintains an extensive portfolio of intellectual property, and has numerous trademark Applications and Copyright Registrations.

The company's extensive list of customers includes most of the world's leading electronics manufacturers of Computer, Consumer, Industrial, and Communications products.

For additional information, including sales office locations, please visit the O_2Micro web site at **www.o2micro.com**.

O2Micro®
Breathing Life into Mobility

www.o2micro.com

Copyright © 2007 by O_2Micro. All rights reserved.
PO_2WER, O_2Micro, the O_2Micro logo, and combinations thereof are registered trademarks of O_2Micro.
SMBus is a trademark of the SMBus Association. DPST is a trademark of the Intel Corporation.
All other trademarks are the property of their respective owners.