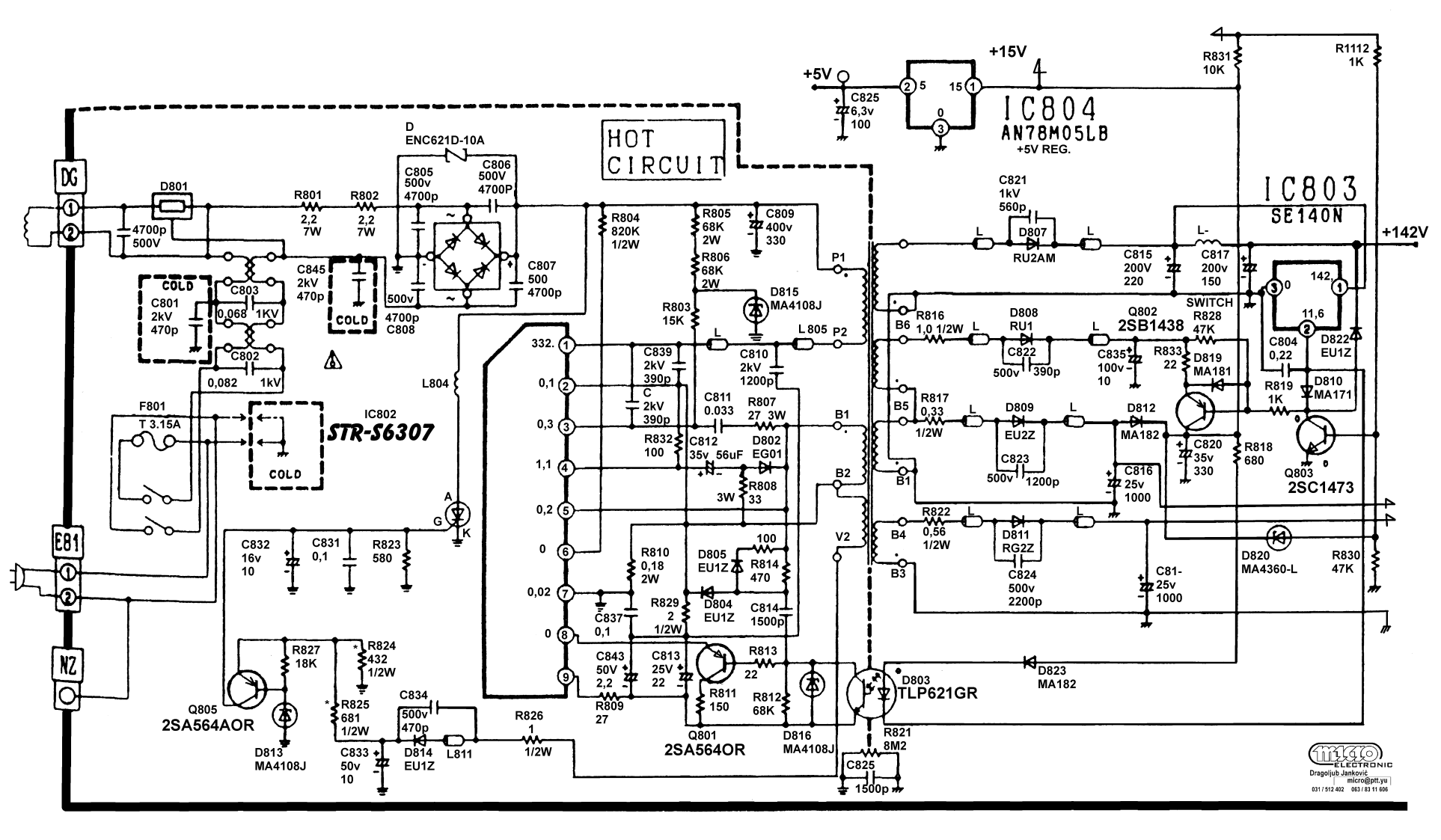

micro ELECTRONIC
Dragoljub Janković
micro@ptt.yu
031 / 512 402 063 / 83 11 606

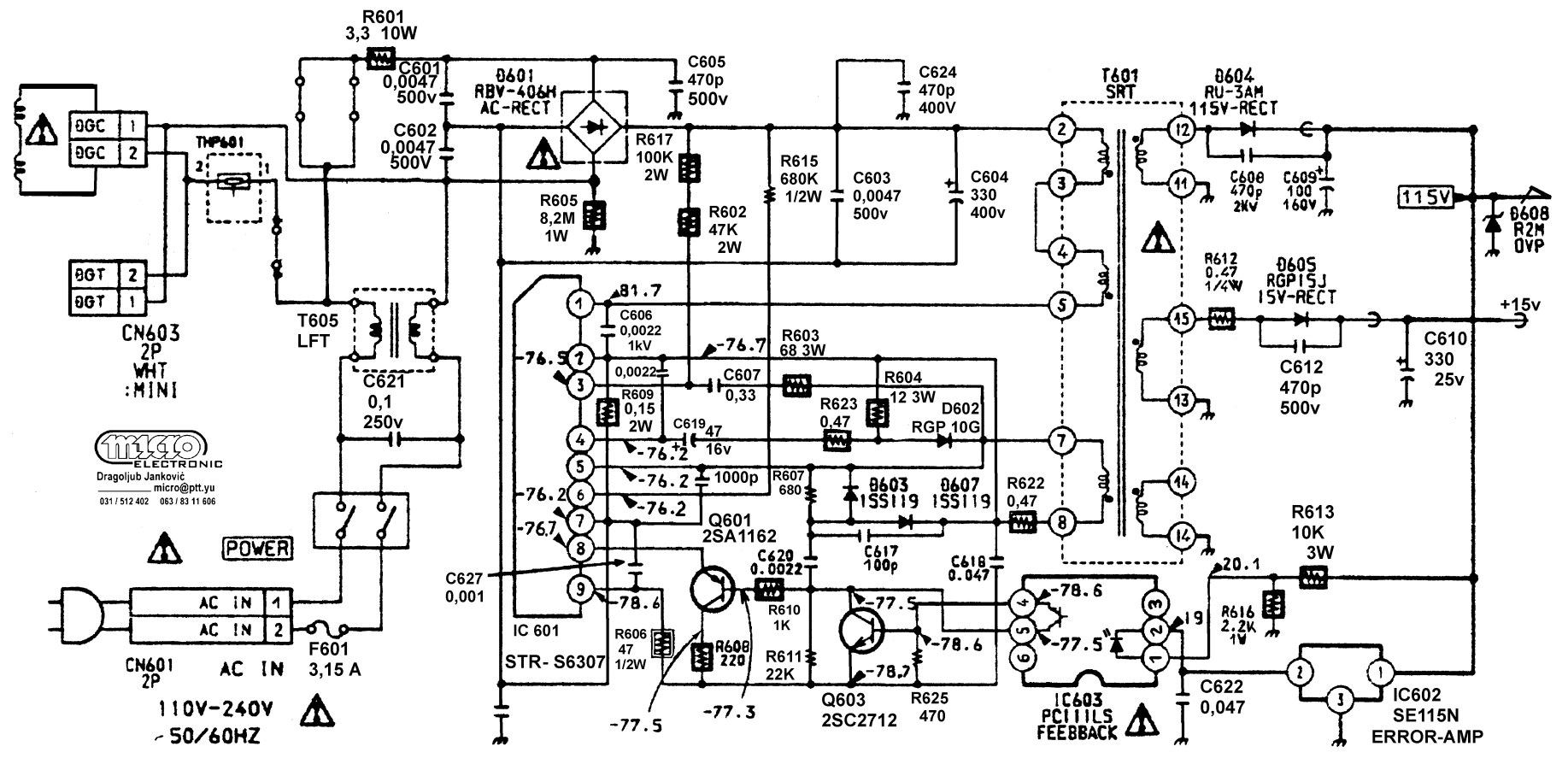
R601
3,3 10W
C601
0,0047
500v
C602
0,0047
500V
D601
RBV-406H
AC-RECT
C605
470p
500v
C624
470p
400V
T601
SRT
D604
RU-3AM
115V-RECT
DGC 1
DGC 2
THP601
R617
100K
2W
R605
8,2M
1W
R602
47K
2W
R615
680K
1/2W
C603
0,0047
500v
C604
330
400v
C608
470p
2KV
C609
100
160V
115V
D608
R2M
OVP
DGT 2
DGT 1
CN603
2P
WHT
:MINI
T605
LFT
C621
0,1
250v
81.7
C606
0,0022
1kV
-76.5
-76.7
R603
68 3W
0,0022
C607
0,33
R604
12 3W
R612
0,47
1/4W
D605
RGP15J
15V-RECT
+15v
C610
330
25v
C612
470p
500v
R609
0,15
2W
C619
47
16v
R623
0,47
D602
RGP 10G
-76.2
1000p
R607
680
D603
1SS119
D607
1SS119
R622
0,47
R613
10K
3W
micro
ELECTRONIC
Dragoljub Janković
micro@ptt.yu
031 / 512 402 063 / 83 11 606
POWER
Q601
2SA1162
C620
0.0022
C617
100p
C618
0.047
20.1
C627
0,001
-78.6
R610
1K
-77.5
-78.6
R616
2,2K
1W
AC IN 1
AC IN 2
F601
3,15 A
IC 601
STR- S6307
R606
47
1/2W
R608
220
R611
22K
-78.7
Q603
2SC2712
R625
470
IC603
PC111LS
FEEBBACK
C622
0,047
IC602
SE115N
ERROR-AMP
CN601
2P
AC IN
110V-240V
50/60HZ
-77.5
-77.3

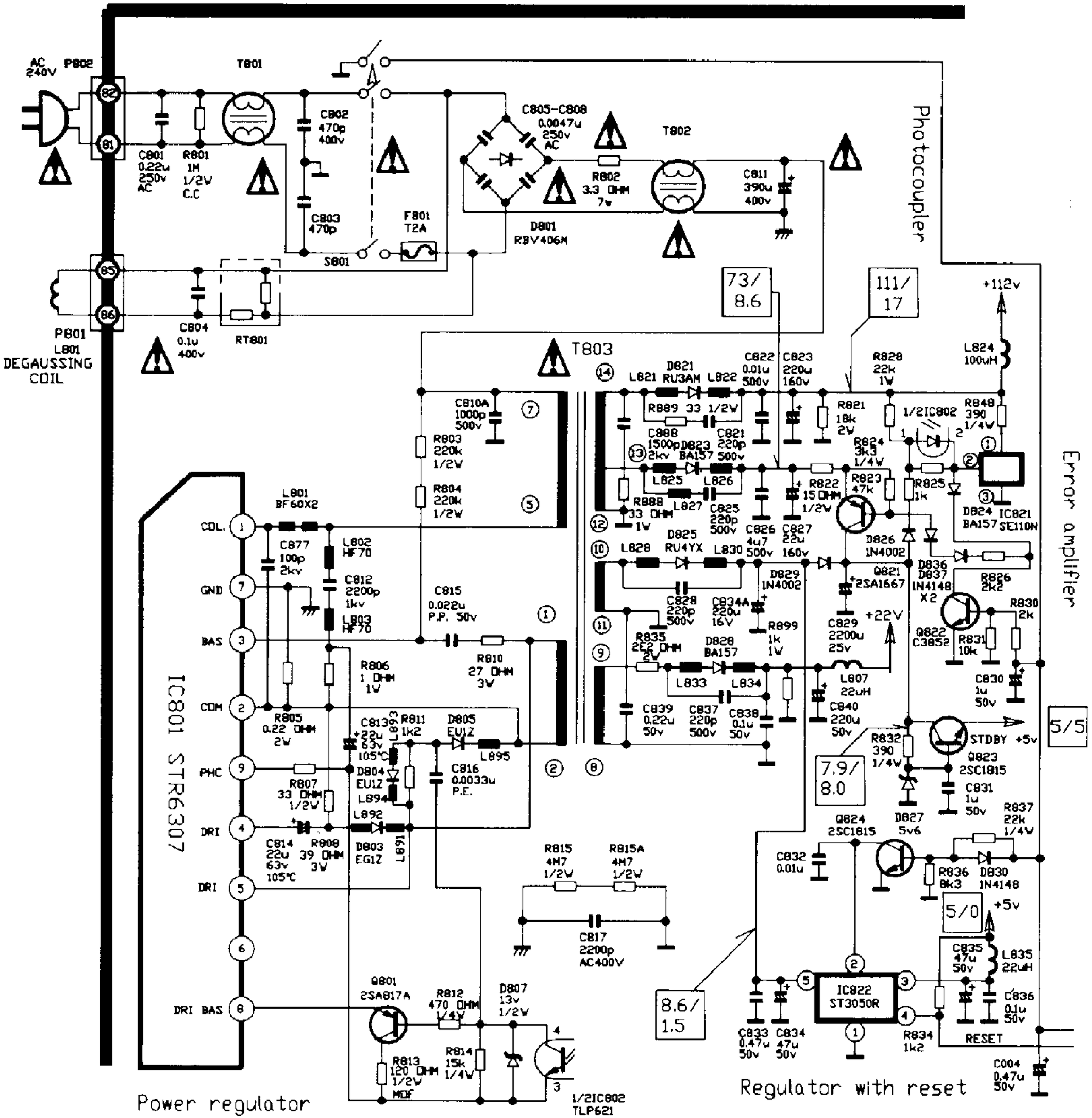
AC 240V
P802
T801
C801 0.22u 250v AC
R801 1M 1/2W C.C
C802 470p 400v
C803 470p
S801
F801 T2A
C805-C808 0.0047u 250v AC
D801 RBV406M
R802 3.3 OHM 7w
T802
C811 390u 400v
Photocoupler
P801
L801
DEGAUSSING COIL
C804 0.1u 400v
RT801
73/ 8.6
111/ 17
+112v
T803
C810A 1000p 500v
R803 220k 1/2W
R804 220k 1/2W
L801 BF60X2
COL.
GND
BAS
COM
PHC
DRI
DRI
DRI BAS
C877 100p 2kv
L802 HF70
C812 2200p 1kv
L803 HF70
C815 0.022u P.P. 50v
R806 1 OHM 1W
R810 27 OHM 3W
R805 0.22 OHM 2W
C813 22u 63v 105°C
L893
R811 1k2
D805 EU1Z
L895
C816 0.0033u P.E.
D804 EU1Z
L894
R807 33 OHM 1/2W
L892
C814 22u 63v 105°C
R808 39 OHM 3W
D803 EG1Z
L891
IC801 STR6307
Power regulator
R815 4M7 1/2W
R815A 4M7 1/2W
C817 2200p AC400V
Q801 2SA817A
R812 470 OHM 1/4W
D807 13v 1/2W
R813 120 OHM 1/2W MOF
R814 15k 1/4W
1/2IC802 TLP621
8.6/ 1.5
L821 RU3AM L822
D821
C822 0.01u 500v
C823 220u 160v
R828 22k 1W
L824 100uH
R889 33 1/2W
C888 1500p 2kv
D823 BA157
C821 220p 500v
R821 18k 2W
1/2IC802
R848 390 1/4W
R824 3k3 1/4W
L825 L826
R822 15 OHM 1/2W
R823 47k
R825 1k
D824 BA157
IC821 SE110N
R888 33 OHM 1W
L827
C825 220p 500v
C826 4u7 500v
C827 22u 160v
D825 RU4YX
L828 L830
D826 1N4002
D829 1N4002
Q821 2SA1667
D836 D837 1N4148 X2
R826 2k2
C828 220p 500v
C834A 220u 16V
R899 1k 1W
C829 2200u 25v
+22V
Q822 C3852
R831 10k
R830 2k
R835 2E2 OHM 2W
D828 BA157
L833 L834
L807 22uH
C830 1u 50v
C839 0.22u 50v
C837 220p 500v
C838 0.1u 50v
C840 220u 50v
Error amplifier
5/5
R832 390 1/4W
STDBY +5v
Q823 2SC1815
7.9/ 8.0
C831 1u 50v
D827 5v6
Q824 2SC1815
R837 22k 1/4W
C832 0.01u
R836 8k3
D830 1N4148
5/0
+5v
C835 47u 50v
L835 22uH
IC822 ST3050R
C836 0.1u 50v
C833 0.47u 50v
C834 47u 50v
R834 1k2
RESET
C004 0.47u 50v
Regulator with reset