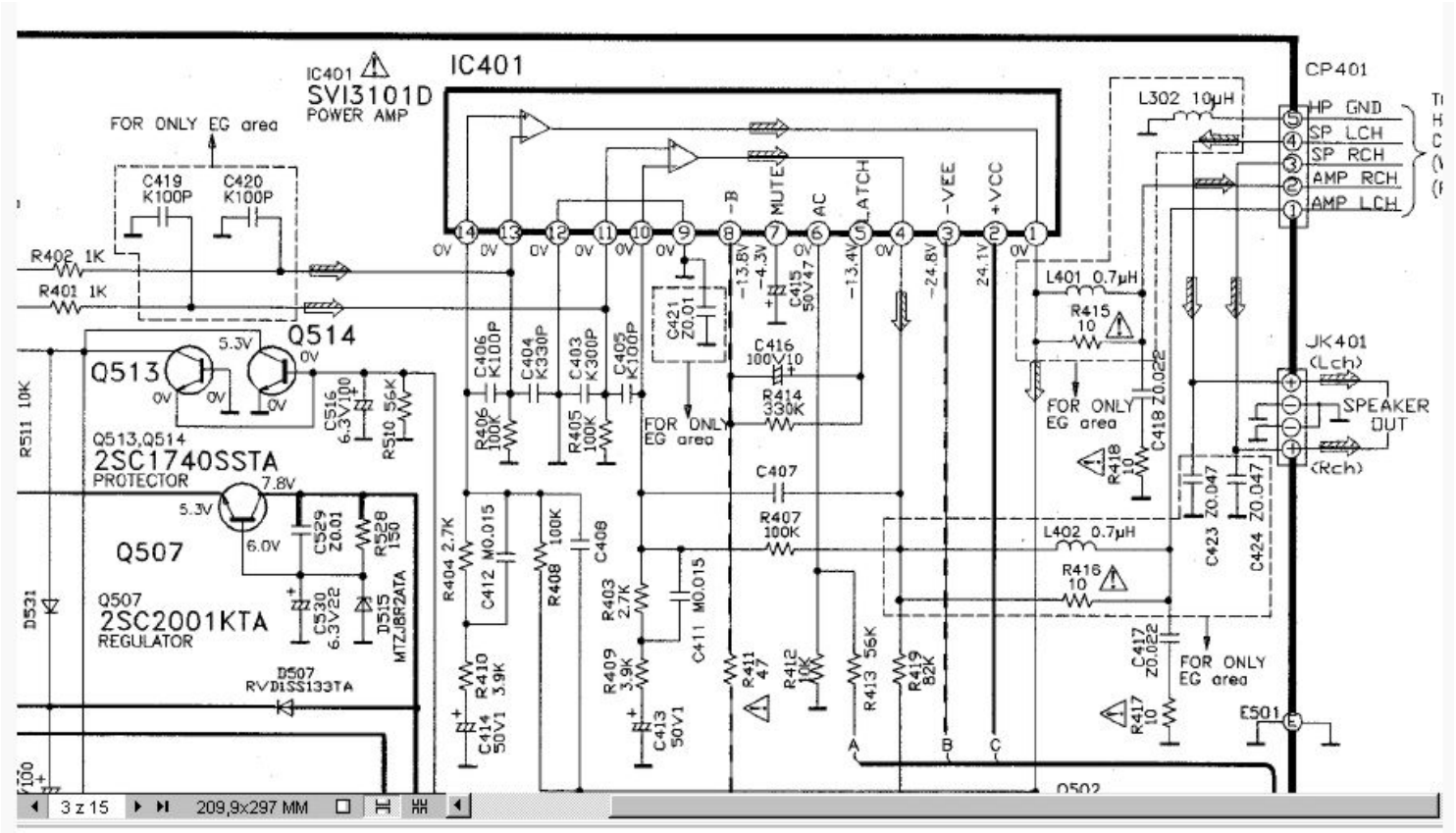
IC401
SVI3101D
POWER AMP
IC401
FOR ONLY EG area
C419 K100P
C420 K100P
R402 1K
R401 1K
Q514
Q513
Q513,Q514
2SC1740SSTA
PROTECTOR
Q507
Q507
2SC2001KTA
REGULATOR
D507
RVD1SS133TA
C406 K100P
C404 K330P
C403 K300P
C405 K100P
C421 Z0.01
C416 100V10
C415 50V47
R414 330K
C407
R407 100K
R404 2.7K
C412 M0.015
R408 100K
C408
R403 2.7K
C411 M0.015
R409 3.9K
C413 50V1
R410 3.9K
C414 50V1
R411 47
R412 10K
R413 56K
R419 82K
C516 6.3V100
R510 56K
C529 Z0.01
R528 150
C530 6.3V22
D515 MTZJ8R2ATA
R511 10K
D531
L302 10μH
L401 0.7μH
L402 0.7μH
R415 10
R416 10
R417 10
R418 10
C418 Z0.022
C417 Z0.022
C423 Z0.047
C424 Z0.047
FOR ONLY EG area
CP401
HP GND
SP LCH
SP RCH
AMP RCH
AMP LCH
JK401
(Lch)
SPEAKER OUT
(Rch)
E501
-B
MUTE
AC
LATCH
-VEE
+VCC
Q502
3 z 15
209,9x297 MM