LOW DROPOUT REGULATOR

FEATURES

- **Up to 5 A Output Current Capability With External PNP Transistor**
- **Internal Short Circuit Protection**
- **Excellent Load Regulation**
- **CMOS/TTL-Compatible On/Off Switch**
- **Internal Reverse Bias Current Protection Switch**
- **Internal Thermal Shutdown**
- **Broad Operating Voltage Range**
- **High Impedance V_{SENSE} Pin (Off Mode)**
- **Continuous and Pulsed Current Modes**

APPLICATIONS

- **Battery Powered Systems**
- **Cellular/Cordless Telephones**
- **Radio Control Systems**
- **Wireless Communications Systems**
- **Portable Instrumentations**
- **Portable Computers**
- **Personal Digital Assistants**
- **Local Area Network (LAN) Receivers**
- **Lithium Ion Battery Chargers**
- **Power Recovery for Microprocessors**

DESCRIPTION

The TK732xx is a controller IC for a low dropout voltage regulator. The TK732xx and the external PNP power transistor provide standard output voltages from 2 to 11 V and output current from 100 mA to 5 A. By utilizing an external PNP power transistor, low dropout voltage at high current can be readily achieved. The internal electronic switch can be controlled by TTL or CMOS logic levels. The device is in the “on” state when the control pin is pulled to a high logic level. A pin for a bypass capacitor, which connects to the internal circuitry, is provided to lower the overall output noise level.

The current limit characteristics can be configured as continuous (constant current) or pulsed (cycling). An internal thermal shutdown circuit limits the junction temperatures to below 150 °C. In the “off” mode, the output of the regulator becomes a high impedance. This prevents the output capacitor from being rapidly discharged for backup to the load.

TK732xx



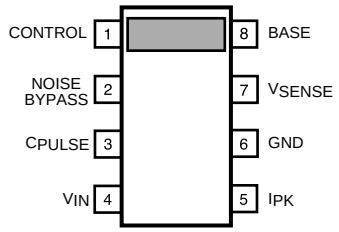

BLOCK DIAGRAM

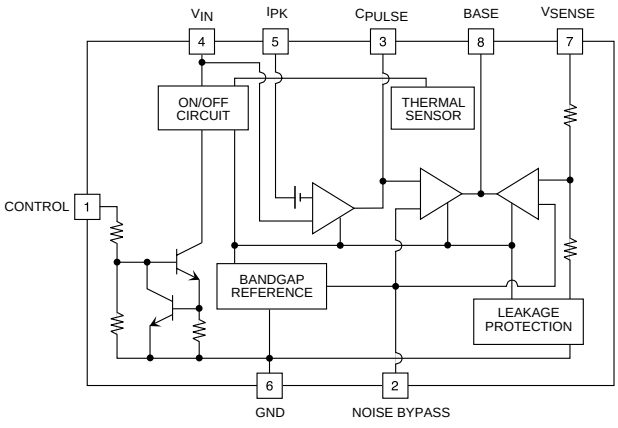

ORDERING INFORMATION

TK732 □□ M □ L □

- Voltage Code
- Package Code
- Grade
- Tape/Reel Code
- Temp. Code

VOLTAGE CODE

20 = 2.0 V *	32 = 3.2 V	44 = 4.4 V
21 = 2.1 V *	33 = 3.3 V	45 = 4.5 V
22 = 2.2 V *	34 = 3.4 V	46 = 4.6 V
23 = 2.3 V *	35 = 3.5 V	47 = 4.7 V
24 = 2.4 V	36 = 3.6 V	48 = 4.8 V
25 = 2.5 V	37 = 3.7 V	49 = 4.9 V
26 = 2.6 V	38 = 3.8 V	50 = 5.0 V
27 = 2.7 V	39 = 3.9 V	55 = 5.5 V *
28 = 2.8 V	40 = 4.0 V	70 = 7.0 V *
29 = 2.9 V	41 = 4.1 V	80 = 8.0 V
30 = 3.0 V	42 = 4.2 V	11 = 11.0 V
31 = 3.1 V	43 = 4.3 V	

TAPE/REEL CODE
L: Tape Left

TEMP. RANGE
C: -30 to 80 °C **
I : -40 to 85 °C

PACKAGE CODE
M: SOT-23L-8

GRADE
None: Standard ± 2%
H: High (Special) ***

* Unavailable with I Rank
** unless Otherwise Specified
*** TK73241MCLH, TK73242MCLH Available Only

ABSOLUTE MAXIMUM RATINGS (STANDARD DEVICES) (NOTE 6)

Supply Voltage Range ..... 19 V
Power Dissipation (Note 1) ..... 600 mW
Reverse Bias Voltage Range ..... 6 V
Noise Bypass Pin Terminal Voltage Range ..... 5 V
Control Pin Terminal Voltage Range..... 14 V
Storage Temperature Range ..... -55 to +150 °C
Operating Temperature Range .....-30 to +80 °C
Extended Temperature Range ..... -40 to +85 °C
Operating Voltage Range..... 1.8 to 14.0 V
Junction Temperature .....150 °C
Lead Soldering Temperature (10 s) .....235 °C

TK732xx ELECTRICAL CHARACTERISTICS (STANDARD DEVICES)

Test conditions: $V_{IN} = V_{OUT(TYP)} + 1$ V, $T_A = 25$ °C, unless otherwise specified.

SYMBOL	PARAMETER	TEST CONDITIONS	MIN	TYP	MAX	UNITS
I_Q	Quiescent Current	I_{OUT} = 0 mA, Excluding I_{CONT}		250	360	µA
I_{STBY}	Standby Current	V_{IN} = 8 V, Output OFF			0.1	µA
$I_{R(LEAK)}$	Reverse Bias Leakage (Note 5)	V_R = 5 V, Excluding External Transistor, Output OFF		2	50	nA
I_{OUT}	Output Current	External Transistor Dependent		N/A		A
V_{OUT}	Output Voltage	I_{OUT} = 30 mA, See Table 1				V
V_{DROP}	Dropout Voltage	External Transistor Dependent		N/A		V
Line Reg	Line Regulation	$V_{IN} = V_{OUT(TYP)} + 1$ V to $V_{OUT(TYP)} + 6$ V (Note 2)		3.0	20	mV
Load reg	Load Regulation	External Transistor Dependent		10		mV
$I_{BASE(L)}$	Base Current LOW	1.8 V ≤ V_{IN} ≤ 4 V	15			mA
$I_{BASE(H)}$	Base Current HIGH	4.1 V ≤ V_{IN} ≤ 12 V	40			mA
V_{SENSE}	Current Limit Detect Voltage	Continuous Current Limit Mode	80	100	120	mV
		Pulse Current Limit Mode	70	90	110	mV
RR	Ripple Rejection	f = 400 Hz, C_L = 10 µF, C_N = 0.1 µF, $V_{IN} = V_{OUT(TYP)}$ = 1.5 V, I_{OUT} = 30 mA, V_{RIPPLE} = 100 mVrms, (Note 3)		57		dB
V_{NO}	Output Noise	f = 1 kHz, BPF = 400 Hz to 30 kHz, (Note 3)		0.13		µV/$\sqrt{Hz}$
I_{PULSE}	C_{PULSE} Pin Terminal Current	(Note 4)	15	25	45	µA
$\Delta V_{OUT}/\Delta T$	Temperature Coefficient			20		ppm/° C
V_{ref}	Reference Voltage			1.25		V
CONTROL TERMINAL SPECIFICATIONS						
I_{CONT}	Control Current	V_{CONT} = 1.8 V, Output ON		6.5	20	µA
$V_{CONT(ON)}$	Control Voltage (ON)	Output ON	1.8			V
$V_{CONT(OFF)}$	Control Voltage (OFF)	Output OFF			0.6	V

TK732xx ELECTRICAL CHARACTERISTICS (STANDARD DEVICES) CONT.

Note 1: Power dissipation is 600 mW when mounted as recommended. Derate at 4.8 mW/°C for operation above 25 °C.
Note 2: Refer to :Definition of Terms."
Note 3: Ripple rejection and noise voltage are affected by the value and characteristics of the capacitor used.
Note 4: This pin is used for Pulse Current Limit Mode. When selecting Continuous Current Limit Mode, this pin is connected to GND.
Note 5: Not applicable for V_{OUT} > 4.8 V.
Note 6: The voltage applied to any pin must be greater than -0.4 V.
Gen. Note: Parameters with min. or max. values are 100% tested at T_A = 25 °C.

TK732xx ELECTRICAL CHARACTERISTICS TABLE 1 (STANDARD DEVICES)

Test Conditions: $V_{IN} = V_{OUT(TYP)}$ + 1 V, I_{OUT} = 30 mA, T_A = 25 °C, unless otherwise specified.

		Room Temp. Range (T_A = 25 °C)		Full Temp. Range (T_A = -40 to +85 °C) (Applies to "I" Rank Only)	
Output Voltage	Voltage Code	$V_{OUT(MIN)}$	$V_{OUT(MAX)}$	$V_{OUT(MIN)}$	$V_{OUT(MAX)}$
2.0 V	20	1.940 V	2.060 V		
2.1 V	21	2.040 V	2.160 V		
2.2 V	22	2.140 V	2.260 V		
2.3 V	23	2.240 V	2.360 V		
2.4 V	24	2.340 V	2.460 V	2.300 V	2.500 V
2.5 V	25	2.440 V	2.560 V	2.400 V	2.600 V
2.6 V	26	2.540 V	2.660 V	2.500 V	2.700 V
2.7 V	27	2.640 V	2.760 V	2.600 V	2.800 V
2.8 V	28	2.740 V	2.860 V	2.700 V	2.900 V
2.9 V	29	2.840 V	2.960 V	2.800 V	3.000 V
3.0 V	30	2.940 V	3.060 V	2.900 V	3.100 V
3.1 V	31	3.040 V	3.160 V	3.000 V	3.200 V
3.2 V	32	3.140 V	3.260 V	3.095 V	3.305 V
3.3 V	33	3.240 V	3.360 V	3.190 V	3.410 V
3.4 V	34	3.335 V	3.465 V	3.290 V	3.510 V
3.5 V	35	3.435 V	3.565 V	3.385 V	3.615 V
3.6 V	36	3.535 V	3.665 V	3.485 V	3.720 V
3.7 V	37	3.630 V	3.770 V	3.580 V	3.820 V
3.8 V	38	3.725 V	3.875 V	3.675 V	3.925 V
3.9 V	39	3.825 V	3.975 V	3.770 V	4.030 V
4.0 V	40	3.920 V	4.080 V	3.870 V	4.130 V
4.1 V	41	4.020 V	4.180 V	3.965 V	4.235 V
4.2 V	42	4.120 V	4.280 V	4.060 V	4.335 V
4.3 V	43	4.215 V	4.385 V	4.160 V	4.440 V
4.4 V	44	4.315 V	4.485 V	4.255 V	4.545 V
4.5 V	45	4.410 V	4.590 V	4.350 V	4.645 V
4.6 V	46	4.510 V	4.690 V	4.450 V	4.750 V
4.7 V	47	4.605 V	4.795 V	4.545 V	4.850 V
4.8 V	48	4.705 V	4.895 V	4.640 V	4.955 V
4.9 V	49	4.800 V	5.000 V	4.740 V	5.060 V
5.0 V	50	4.900 V	5.100 V	4.835 V	5.165 V
5.5 V	55	5.390 V	5.610 V		
7.0 V	70	6.860 V	7.140 V		
6.0 V	80	7.840 V	8.160 V	7.745 V	8.265 V
11.0 V	11	10.78 V	11.22 V	10.650 V	11.365 V

ABSOLUTE MAXIMUM RATINGS (SPECIAL DEVICES) (Note 6)

Supply Voltage Range ..... 19 V
Power Dissipation (Note 1) ..... 600 mW
Reverse Bias Voltage Range ..... 6 V
Noise Bypass Pin Terminal Voltage Range ..... 5 V
Control Pin Terminal Voltage Range..... 14 V
Storage Temperature Range ..... -55 to +150 °C
Operating Temperature Range .....-10 to +60 °C
Operating Voltage Range..... 1.8 to 14.5 V
Junction Temperature ..... 150 °C
Lead Soldering Temperature (10 s) ..... 235 °C

TK73241MCLH, TK73242MCLH ELECTRICAL CHARACTERISTICS

Test conditions: $V_{IN} = V_{OUT(TYP)} + 1$ V, $T_A = 25$ °C, unless otherwise specified.

SYMBOL	PARAMETER	TEST CONDITIONS	MIN	TYP	MAX	UNITS
I_Q	Quiescent Current	I_{OUT} = 0 mA, Excluding I_{CONT}		240	300	µA
I_{STBY}	Standby Current	V_{IN} = 8 V, Output OFF			0.1	µA
$I_{R(LEAK)}$	Reverse Bias Leakage (Note 5)	V_R = 5 V, Excluding External Transistor, Output OFF		2	50	nA
I_{OUT}	Output Current	External Transistor Dependent		N/A		A
V_{OUT}	Output Voltage	I_{OUT} = 30 mA, See Table 2				V
V_{DROP}	Dropout Voltage	External Transistor Dependent		N/A		V
Line Reg	Line Regulation	$V_{IN} = V_{OUT(TYP)} + 1$ V to $V_{OUT(TYP)} + 6$ V (Note 2)		3.0	20	mV
Load reg	Load Regulation	External Transistor Dependent		10		mV
I_{BASE}	Base Current		50			mA
V_{SENSE}	Current Limit Detect Voltage	Continuous Current Limit Mode	85	100	115	mV
		Pulse Current Limit Mode	75	90	105	mV
RR	Ripple Rejection	f = 400 Hz, C_L = 10 µF, C_N = 0.1 µF, $V_{IN} = V_{OUT(TYP)}$ = 1.5 V, I_{OUT} = 30 mA, V_{RIPPLE} = 100 mVrms, (Note 3)		57		dB
V_{NO}	Output Noise	f = 1 kHz, BPF = 400 Hz to 30 kHz, (Note 3)		0.13		µV/$\sqrt{Hz}$
I_{PULSE}	C_{PULSE} Pin Terminal Current	(Note 4)	15	25	45	µA
$\Delta V_{OUT}/\Delta T$	Temperature Coefficient			20		ppm/° C
V_{ref}	Reference Voltage			1.25		V
CONTROL TERMINAL SPECIFICATIONS						
I_{CONT}	Control Current	V_{CONT} = 1.8 V, Output ON		6.5	20	A
$V_{CONT(ON)}$	Control Voltage (ON)	Output ON	1.8			V
$V_{CONT(OFF)}$	Control Voltage (OFF)	Output OFF			0.6	V

TK73241MCLH, TK73242MCLH ELECTRICAL CHARACTERISTICS CONT.

Note 1: Power dissipation is 600 mW when mounted as recommended. Derate at 4.8 mW/°C for operation above 25 °C.
Note 2: Refer to “Definition of Terms.”
Note 3: Ripple rejection and noise voltage are affected by the value and characteristics of the capacitor used.
Note 4: This pin is used for Pulse Current Limit Mode. When selecting Continuous Current Limit Mode, this pin is connected to GND.
Note 5: Not applicable for V_{OUT} > 4.8 V.
Note 6: The voltage applied to any pin must be greater than -0.4 V.
Gen. Note: Parameters with min. or max. values are 100% tested at T_A = 25 °C.

TK73241MCLH, TK73242MCLH ELECTRICAL CHARACTERISTICS TABLE 2

Test Conditions: $V_{IN} = V_{OUT(TYP)} + 1$ V, I_{OUT} = 30 mA, T_A = 25 °C, unless otherwise specified.

Output Voltage	Voltage Code	Room Temp. Range (T_A = 25 °C)		Full Temp. Range (T_A = -10 to +60 °C)	
		$V_{OUT(MIN)}$	$V_{OUT(MAX)}$	$V_{OUT(MIN)}$	$V_{OUT(MAX)}$
4.1 V	41	4.067 V	4.133 V	4.050 V	4.150 V
4.2 V	42	4.167 V	4.233 V	4.150 V	4.250 V

TEST CIRCUIT

Note:Transistor: 2SB1115
C_N = 0.1 µF
C_P = 0.1 µF
C_L = 4.7 µF
R_P = 330 k
Continuous Current Limit Mode:
I_{SET} (mA) = 100 mV / R_{IPK} (Ω)
Pulse Current Limit Mode:
I_{SET} (mA) = 90 mV / R_{IPK} (Ω)

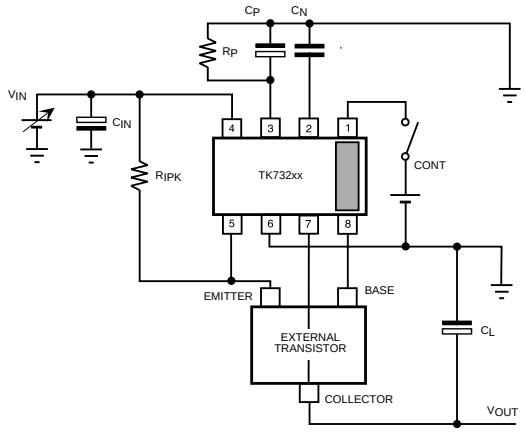

TYPICAL PERFORMANCE CHARACTERISTICS

T_A = 25 °C, external transistor is 2SB1115(NEC), unless otherwise specified.

LINE REGULATION 1

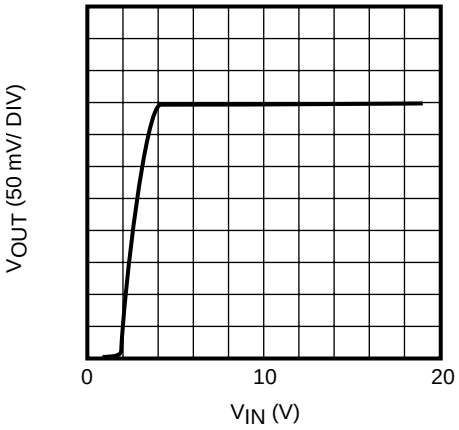

LINE REGULATION 2

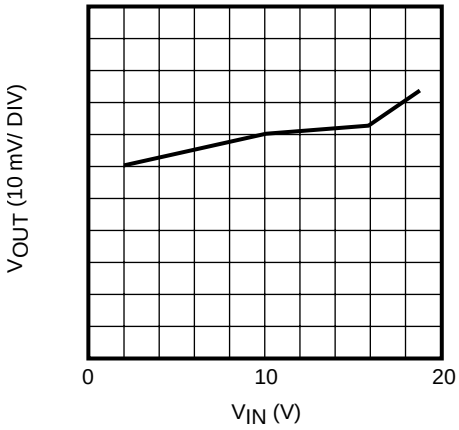

LOAD REGULATION

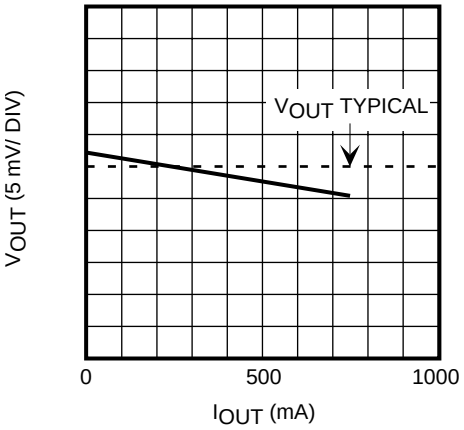

QUIESCENT CURRENT vs. OUTPUT VOLTAGE

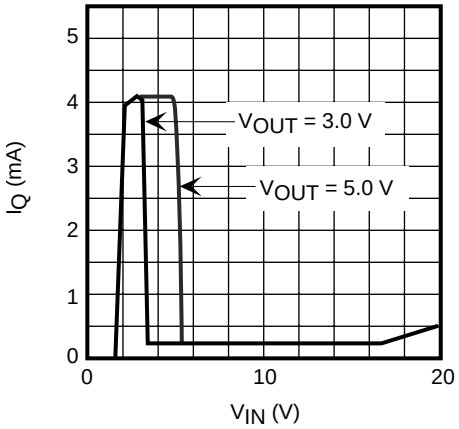

DROPOUT VOLTAGE vs. OUTPUT VOLTAGE

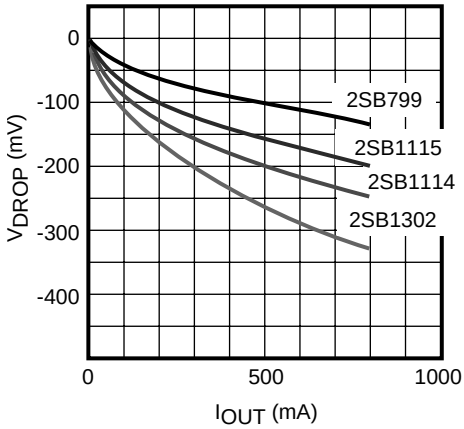

GROUND CURRENT vs. OUTPUT VOLTAGE

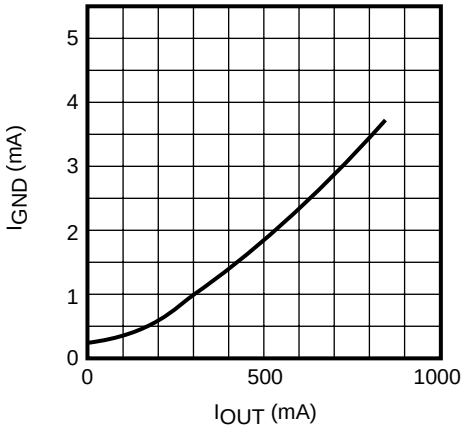

TYPICAL PERFORMANCE CHARACTERISTICS (CONT.)

T_A = 25 °C, external transistor is 2SB1115(NEC), unless otherwise specified.

CURRENT LIMIT DETECTOR VOLTAGE vs. INPUT VOLTAGE

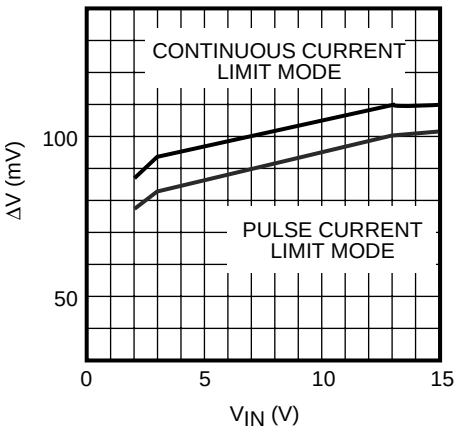

BASE CURRENT DRIVE vs. INPUT VOLTAGE

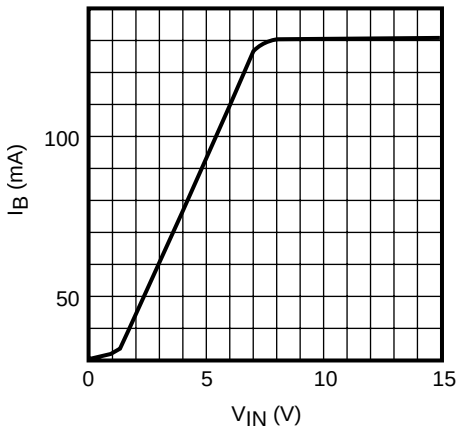

REVERSE BIAS CURRENT (V_{IN} = 0 TO 6 V)

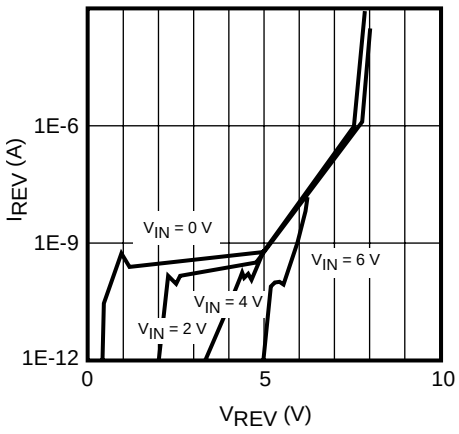

QUIESCENT CURRENT vs. INPUT VOLTAGE (OFF MODE)

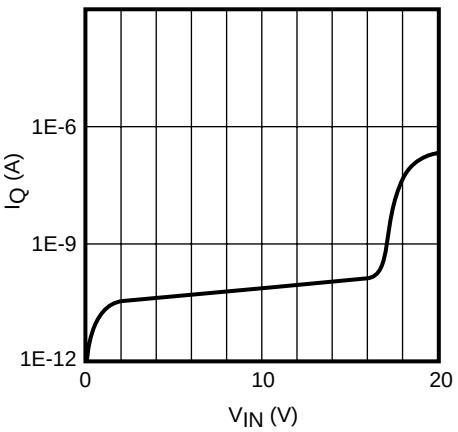

RIPPLE REJECTION

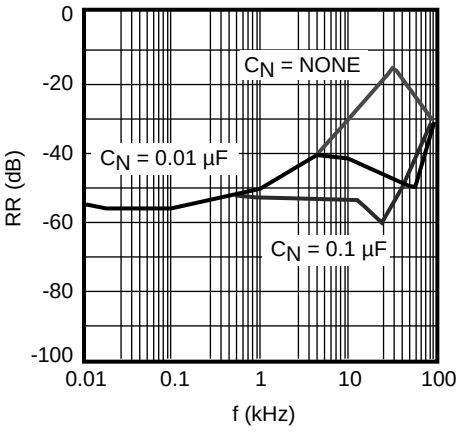

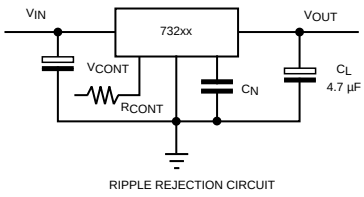

RIPPLE REJECTION CIRCUIT

CONTROL CURRENT vs. TEMPERATURE

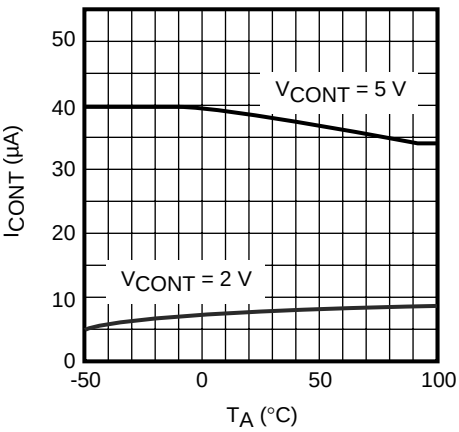

CONTROL VOLTAGE (OUTPUT ON POINT) vs. TEMPERATURE

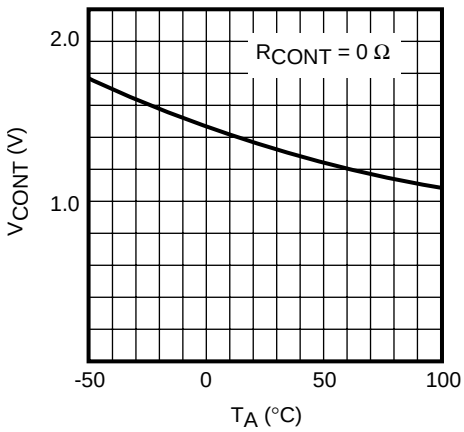

OUTPUT VOLTAGE VARIATION vs. TEMPERATURE

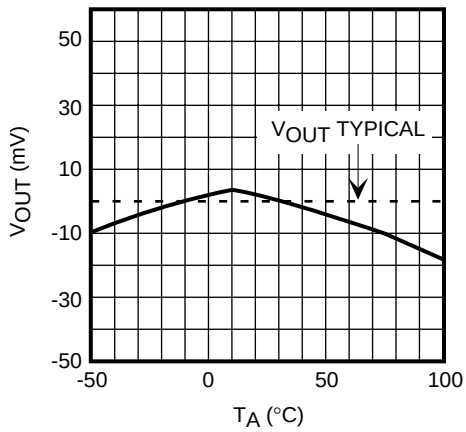

TYPICAL PERFORMANCE CHARACTERISTICS (CONT.)

T_A = 25 °C, external transistor is 2SB1115(NEC), unless otherwise specified.

CONTROL PIN VOLTAGE vs. CONTROL CURRENT

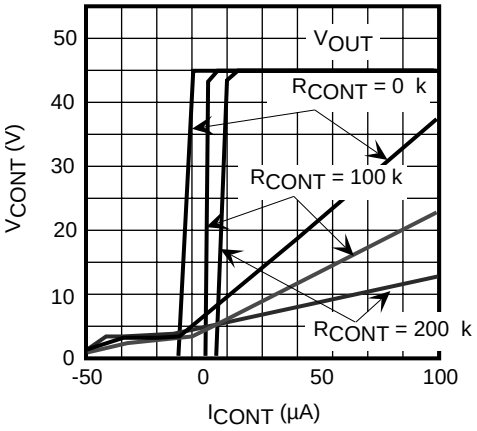

ON/OFF TRANSIENT

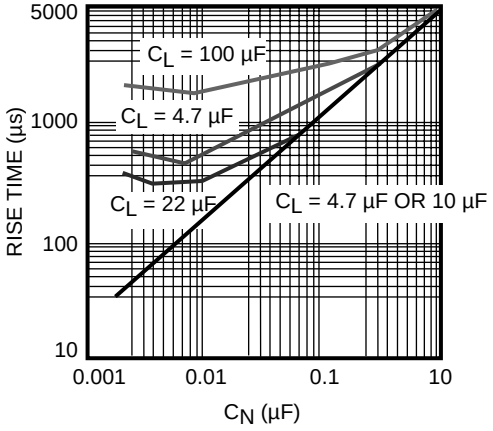

ON/OFF STEP RESPONSE

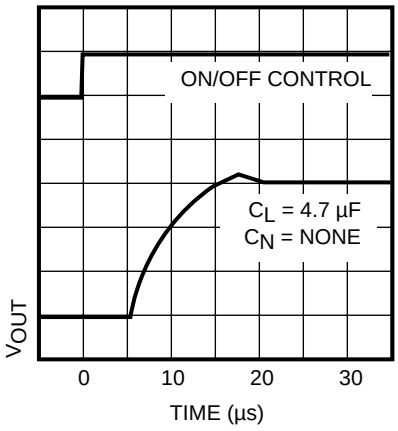

LOAD CURRENT STEP RESPONSE

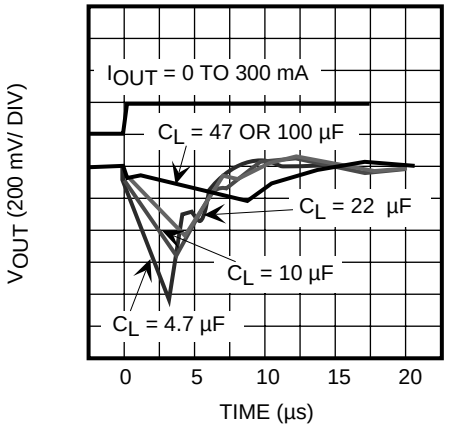

LINE CURRENT STEP RESPONSE

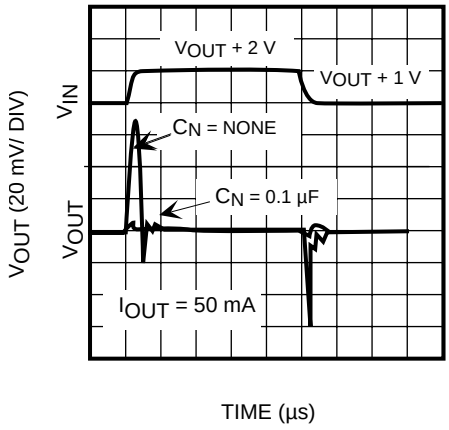

DEFINITION AND EXPLANATION OF TECHNICAL TERMS

OUTPUT VOLTAGE (V_{OUT})

The output voltage is specified with $V_{IN} = (V_{OUT(TYP)} + 1\ V)$ and $I_{OUT} = 30$ mA.

DROPOUT VOLTAGE (V_{DROP})

The dropout voltage is the difference between the input voltage and the output voltage at which point the regulator starts to fall out of regulation. Below this value, the output voltage will fall as the input voltage is reduced. It is dependent upon the load current, the external transistor and the junction temperature.

BASE CONTROL CURRENT (I_{BASE})

The base control current is the drive current for the base of the external transistor.

OUTPUT CURRENT (I_{OUT})

The output current depends on the characteristics of the external transistor and current limit setting.

LINE REGULATION (Line Reg)

Line regulation is the ability of the regulator to maintain a constant output voltage as the input voltage changes. The line regulation is specified as the input voltage is changed from $V_{IN} = V_{OUT(TYP)} + 1\ V$ to $V_{IN} = V_{OUT(TYP)} + 6\ V$.

LOAD REGULATION (Load Reg)

Load regulation is the ability of the regulator to maintain a constant output voltage as the load current changes. It is a pulsed measurement to minimize temperature effects. Load regulation depends on the external transistor.

QUIESCENT CURRENT (I_Q)

The quiescent current is the current which flows through the ground terminal under no load conditions ($I_{OUT} = 0$ mA) and excludes the control pin current.

GROUND CURRENT (I_{GND})

Ground current is the current which flows through the ground pin(s). It is defined as $I_{IN} - I_{OUT}$, excluding control current.

RIPPLE REJECTION RATIO (RR)

Ripple rejection is the ability of the regulator to attenuate the ripple content of the input voltage at the output. It is specified with 100 mVrms, 400 Hz superimposed on the input voltage, where $V_{IN} = V_{OUT(TYP)} + 1.5\ V$. The output decoupling capacitor is set to 10 µF, the noise bypass capacitor is set to 0.1 µF, and the load current is set to 30 mA. Ripple rejection is the ratio of the ripple content of the output vs. the input and is expressed in dB.

STANDBY CURRENT (I_{STBY})

Standby current is the current which flows into the regulator when the output is turned off by the control function ($V_{CONT} = 0\ V$). It is measured with $V_{IN} = 8\ V$ (9 V for the 8 V output device).

REMOTE SENSING (V_{SENSE})

The V_{SENSE} pin is the output voltage sensing pin. If the voltage drop to the load caused by the PCB etch resistance cannot be disregarded, the voltage drop can be compensated by connecting the V_{SENSE} pin as shown below.

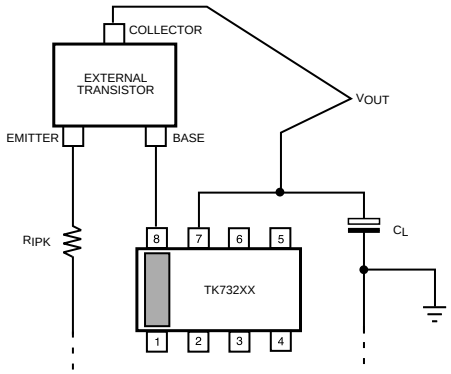

The length of the V_{SENSE} etch should be limited to 30 cm (11.8 in.) maximum.

DEFINITION AND EXPLANATION OF TECHNICAL TERMS (CONT.)

SENSOR CIRCUITS

Overcurrent Sensor

The overcurrent sensor protects the device if the output is shorted to ground.

Thermal Sensor

The thermal sensor protects the device if the junction temperature exceeds the safe value (T_j = 150 °C). This temperature rise can be caused by extreme heat, excessive power dissipation caused by large output voltage drops, or excessive output current. The regulator will shut off when the temperature exceeds the safe value. As the junction temperature decreases, the regulator will begin to operate again. Under sustained fault conditions, the regulator output will oscillate as the device turns off then resets. Damage may occur to the device under extreme fault conditions.

Reverse Voltage Protection

Reverse voltage protection prevents damage due to the output voltage being higher than the input voltage. This fault condition can occur when the output capacitor remains charged and the input is reduced to zero, or when an external voltage higher than the input voltage is applied to the output side.

PACKAGE POWER DISSIPATION (P_D)

This is the power dissipation level at which the thermal sensor is activated. The IC contains an internal thermal sensor which monitors the junction temperature. When the junction temperature exceeds the monitor threshold of 150 °C, the IC is shut down. The junction temperature rises as the difference between the input power (V_{IN} x I_{IN}) and the output power (V_{OUT} x I_{OUT}) increases. The rate of temperature rise is greatly affected by the mounting pad configuration on the PCB, the board material, and the ambient temperature. When the IC mounting has good thermal conductivity, the junction temperature will be low even if the power dissipation is great. When mounted on the recommended mounting pad, the power dissipation of the SOT-23L-8 is increased to 600 mW. For operation at ambient temperatures over 25 °C, the power dissipation of the SOT-23L-8 device should be derated at 4.8 mW/°C. To determine the power dissipation for shutdown when mounted, attach the device on the actual PCB and deliberately increase the output current (or raise the input voltage) until the thermal protection circuit is activated. Calculate the power dissipation of the device by subtracting the output power from the input power. These measurements should allow for the ambient temperature of the PCB. The value obtained from P_D /(150 °C - T_A) is the derating factor. The PCB mounting pad should provide maximum thermal conductivity in order to maintain low device temperatures. As a general rule, the lower the temperature, the better the reliability of the device. The thermal resistance when mounted is expressed as follows:

$$T_j = \theta_{jA} \times P_D + T_A$$

For Toko ICs, the internal limit for junction temperature is 150 °C. If the ambient temperature (T_A) is 25 °C, then:

$$150\ °C = \theta_{jA} \times P_D + 25\ °C$$
$$\theta_{jA} = 125\ °C / P_D$$

P_D is the value when the thermal sensor is activated. A simple way to determine P_D is to calculate V_{IN} x I_{IN} when the output side is shorted. Input current gradually falls as temperature rises. You should use the value when thermal equilibrium is reached.

The range of usable currents can also be found from the graph below.

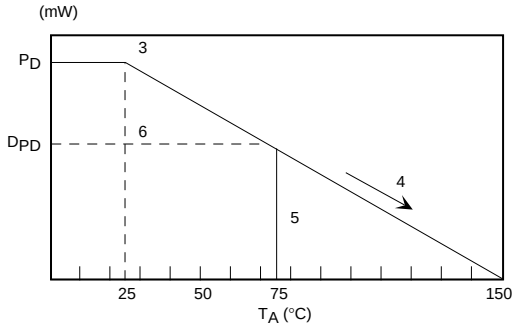

Procedure:

1) Find P_D
2) P_{D1} is taken to be P_D x (Note: It is not necessary to connect a ceramic capacitor in parallel with an aluminum or tantalum output capacitor. (~0.8 - 0.9)

DEFINITIONS AND TERMS (CONT.)

3) Plot P_{D1} against 25 °C
4) Connect P_{D1} to the point corresponding to the 150 °C with a straight line.
5) In design, take a vertical line from the maximum operating temperature (e.g., 75 °C) to the derating curve.
6) Read off the value of P_D against the point at which the vertical line intersects the derating curve. This is taken as the maximum power dissipation, D_{PD}.

The maximum operating current is:

$$I_{OUT} = (D_{PD} / (V_{IN(MAX)} - V_{OUT})$$

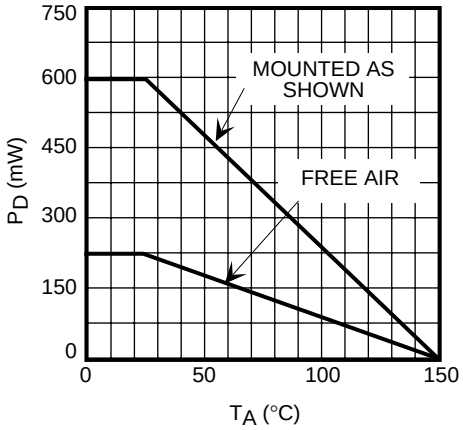

SOT-23L-8 POWER DISSIPATION CURVE

APPLICATION INFORMATION

INPUT-OUTPUT CAPACITORS

The output capacitor is necessary for stable operation. The regulator may oscillate if the output capacitor is too small or missing. The output capacitor size is determined by load, transient response and external transistor used. Evaluation in the circuit is recommended to ensure performance requirements are satisfied. A minimum of 4.7 µF is necessary for stability, with twice that value recommended. The minimum recommended input capacitor is 1 µF. Problems do not occur with larger values of capacitance. However, extremely low ESR may result in unstable operation. Thus, the use of large value ceramic capacitors is not recommended on the output.

BOARD LAYOUT

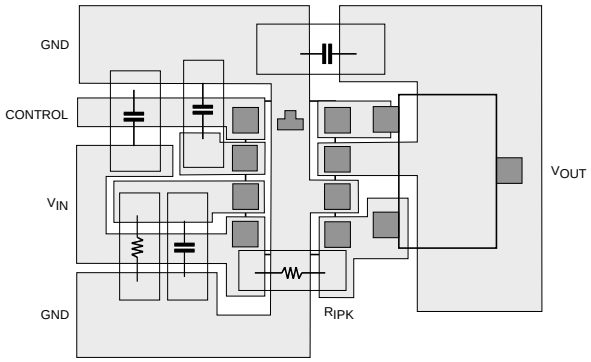

SOT-23L-8 BOARD LAYOUT

APPLICATION INFORMATION (CONT.)

PULSE CURRENT LIMIT MODE

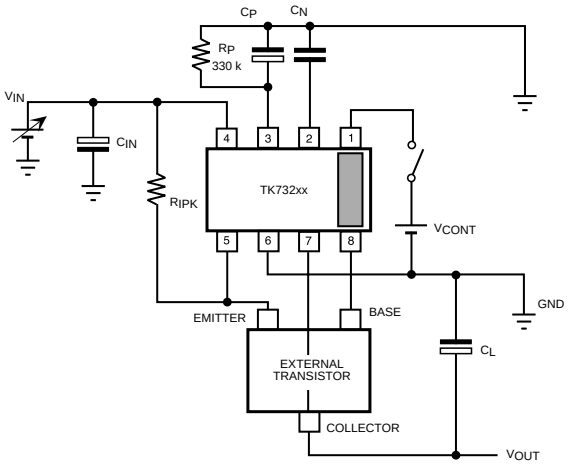

The equation for the pulse output current limit is as follows:

$$I_{SET}\ (mA) = 90\ (mV) / R_{IPK}\ (\Omega)$$

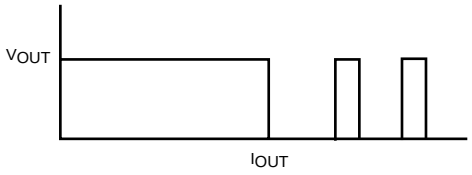

During the initial turn-on, charge (surge) current flows to the output capacitor. This IC has a possibility for the current limit to operate and to turn off the output by the charge current of the output capacitor. Therefore, the relationship between C_L and C_P is set as shown in the graph below:

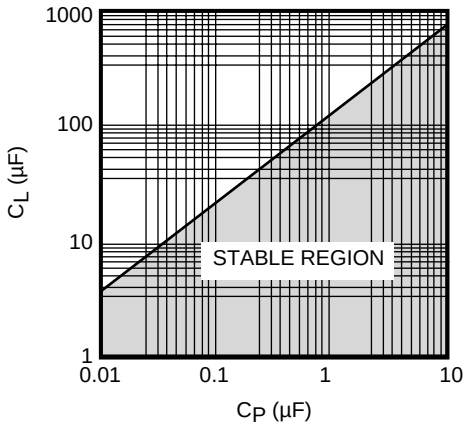

CONTINUOUS CURRENT LIMIT MODE

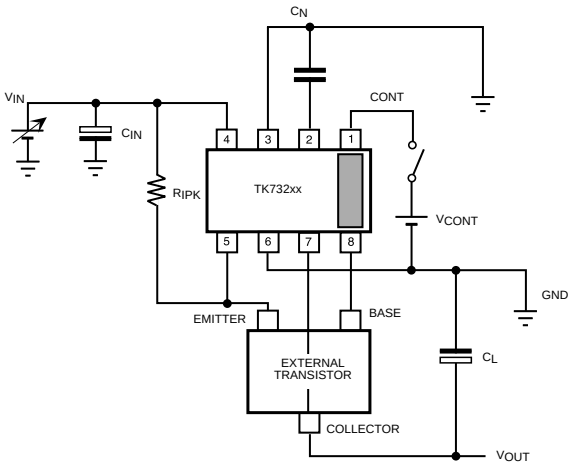

In the continuous current limit mode, the C_{PULSE} pin (pin 3) is directly connected to ground. The output current limit is set by R_{IPK} according to the following equation:

$$I_{SET}\ (mA) = 100\ (mV) / R_{IPK}\ (\Omega)$$

If the continuous current limit mode is also used for output short circuit protection, the I_{SET} value is set 50% to 100% more than the maximum operating current. The current transistor is selected from the I_{SET} value. The output voltage drops when the output current exceeds the I_{SET} value. However, the output voltage returns to normal once the output current decreases below the I_{SET} value.

APPLICATION INFORMATION (CONT.)

EXTERNAL PNP POWER TRANSISTOR

This IC can use any kind of external transistor. The external transistor selection is a function of the load current, H_{fe} and power dissipation. See following chart:

LOAD CURRENT	RECOMMENDED EXTERNAL TRANSISTOR	RECOMMENDED R_{IPK} (Ω)
0 ~ 180 mA	2SB624, 2SB1115, 2SB799 (NEC), 2SB970 (Matushita)	0.33 ~ 0.39
0 ~ 300 mA	2SB1115, 2SB799 (NEC)	0.22 ~ 0.27
0 ~ 500 mA	2SB1114, 2SB1115 (NEC), 2SB1302 (Sanyo), 2SA1203, 2SA1213, 2SA1734 (Toshiba)	0.12 ~ 0.15
0 ~ 1 A	2SA1242, 2SA1736 (Toshiba), 2SB1302, 2SA1896 (Sanyo)	0.056 ~ 0.068
0 ~ 2 A	2SA1451, 2SA1242 (Toshiba)	0.033 ~ 0.039
0 ~ 3 A	2SA1451 (Toshiba), 2SA1645 (NEC)	0.022 ~ 0.027
0 ~ 4 A	2SA1451 (Toshiba), 2SB904 (Sanyo), 2SA1645 (NEC)	0.012 ~ 0.015

HIGH-SIDE SWITCHING

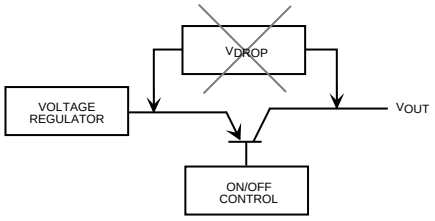

High-side switching should not be implemented by an external transistor as shown above. This results in additional voltage drop and loss of accuracy.

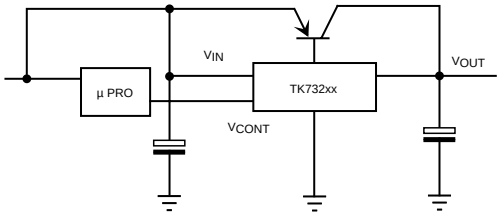

The high output voltage accuracy and low dropout voltage are maintained when the IC is turned ON/OFF by using the control pin as illustrated above.

APPLICATION INFORMATION (CONT.)

VOLTAGE BACKUP OPERATION (HOLDUP TIME)

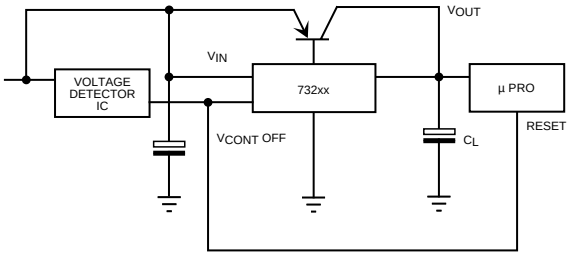

C_L becomes the backup power supply when the microprocessor is reset with the voltage detector IC simultaneously with turning OFF the TK732xx. C_L provides the holdup time necessary to do an orderly shutdown of the microprocessor.

PARALLEL ON/OFF CONTROL OPERATION

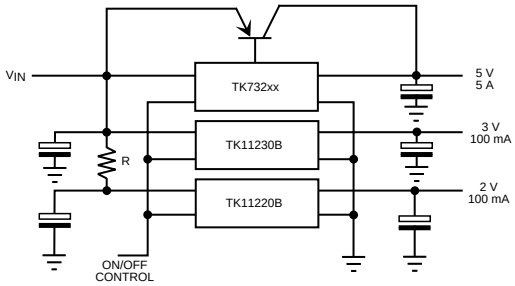

The figure above illustrates multiple regulators being controlled by a single ON/OFF control signal. The series resistor R is put in the input line of the low output voltage regulator in order to prevent overdissipation. The voltage dropped across the resistor reduces the large input-to-output voltage across the regulator, reducing the power dissipation in the device.

OUTPUT VOLTAGE ADJUST

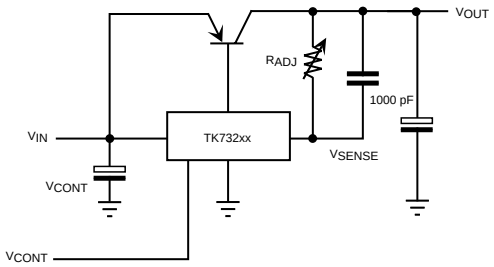

When a highly accurate output voltage is necessary, the output can be adjusted. As shown above, higher output resolution can be achieved by putting a resistor (R_{ADJ}) in the V_{SENSE} pin in parallel with a 1000 pF capacitor. A value of 2 K provides an adjustment of 50 mV typically. Note: using this technique, the output voltage can only be adjusted higher.

BATTERY CHARGER

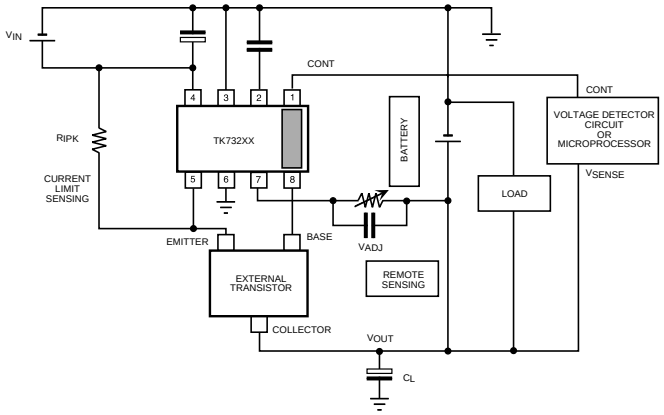

Continuous Current Limit Mode:

$$I_{SET}\ (mA) = 100\ (mV) / R_{IPK}\ (\Omega)$$

APPLICATION INFORMATION (CONT.)

I_{SET} (Continuous Current Limit Mode) is set to the desired charging current.

CHARGING CHARACTERISTICS

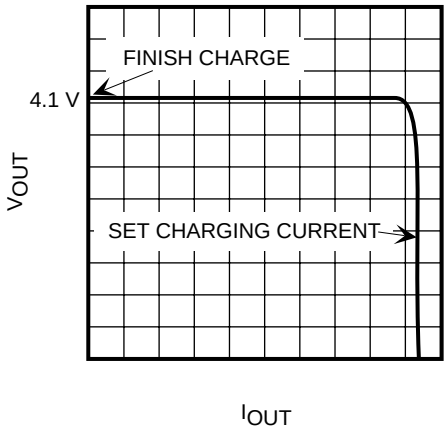

LITHIUM ION BATTERY CHARGER WITH OVERDISSIPATION PROTECTION OF EXTERNAL TRANSISTOR (SHORT CIRCUIT MODE)

(RECOMMENDED WITH TK732xxMCLH)

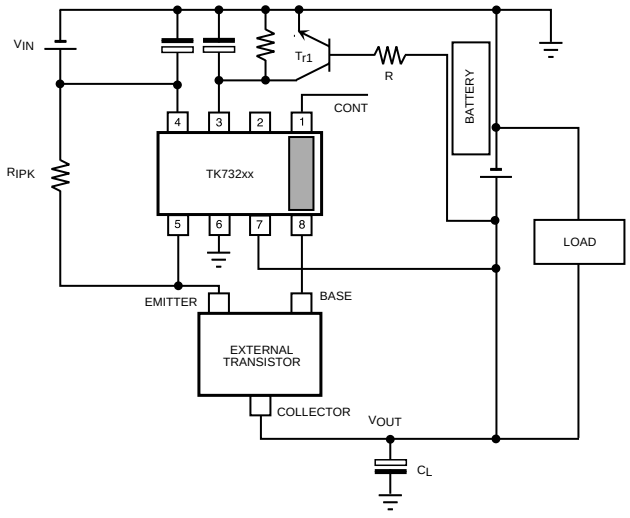

During normal operation, T_{r1} is turned ON, connecting pin 3 (C_{PULSE}) to ground. This provides the continuous current limit mode for normal operating conditions. During a short circuit condition, T_{r1} is turned "off." This converts the circuit into the pulse current limit mode of operation, reducing the power dissipation in the pass transistor. The transition between the continuous and pulse current limit modes can be controlled by adjusting the operating point of T_{r1} by the value of resistor R.

PACKAGE OUTLINE

SOT-23L-8

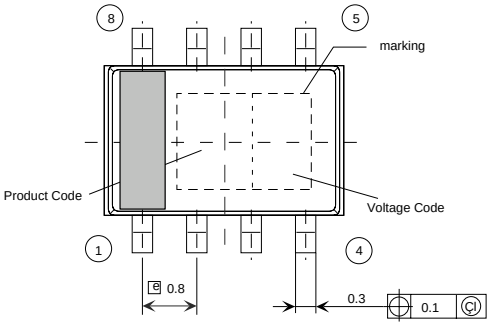

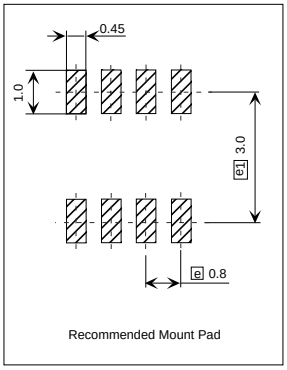

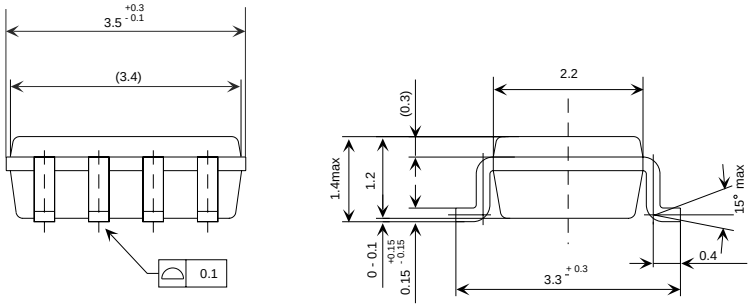

Dimensions are shown in millimeters
Tolerance: x.x = ± 0.2 mm (unless otherwise specified)

Marking Information

Product Code C

	Voltage Code
TK73220	20
TK73221	21
TK73222	22
TK73223	23
TK73224	24
TK73225	25
TK73226	26
TK73227	27
TK73228	28
TK73229	29
TK73230	30
TK73231	31
TK73232	32
TK73233	33
TK73234	34
TK73235	35
TK73236	36
TK73237	37
TK73238	38
TK73239	39
TK73240	40
TK73241	41
TK73242	42
TK73243	43
TK73244	44
TK73245	45
TK73246	46
TK73247	47
TK73248	48
TK73249	49
TK73250	50
TK73255	55
TK73270	70
TK73280	80
TK73211	11

TOKO

Toko America, Inc. Headquarters
1250 Feehanville Drive, Mount Prospect, Illinois 60056
Tel: (847) 297-0070 Fax: (847) 699-7864

TOKO AMERICA REGIONAL OFFICES

Midwest Regional Office
Toko America, Inc.
1250 Feehanville Drive
Mount Prospect, IL 60056
Tel: (847) 297-0070
Fax: (847) 699-7864

Western Regional Office
Toko America, Inc.
2480 North First Street , Suite 260
San Jose, CA 95131
Tel: (408) 432-8281
Fax: (408) 943-9790

Eastern Regional Office
Toko America, Inc.
107 Mill Plain Road
Danbury, CT 06811
Tel: (203) 748-6871
Fax: (203) 797-1223

Semiconductor Technical Support
Toko Design Center
4755 Forge Road
Colorado Springs, CO 80907
Tel: (719) 528-2200
Fax: (719) 528-2375

Visit our Internet site at http://www.tokoam.com

The information furnished by TOKO, Inc. is believed to be accurate and reliable. However, TOKO reserves the right to make changes or improvements in the design, specification or manufacture of its products without further notice. TOKO does not assume any liability arising from the application or use of any product or circuit described herein, nor for any infringements of patents or other rights of third parties which may result from the use of its products. No license is granted by implication or otherwise under any patent or patent rights of TOKO, Inc.

© 1999 Toko, Inc.
All Rights Reserved